PerSci 27x Alignment & Repair

Martin Eberhard Version 2.00 December 14, 2017

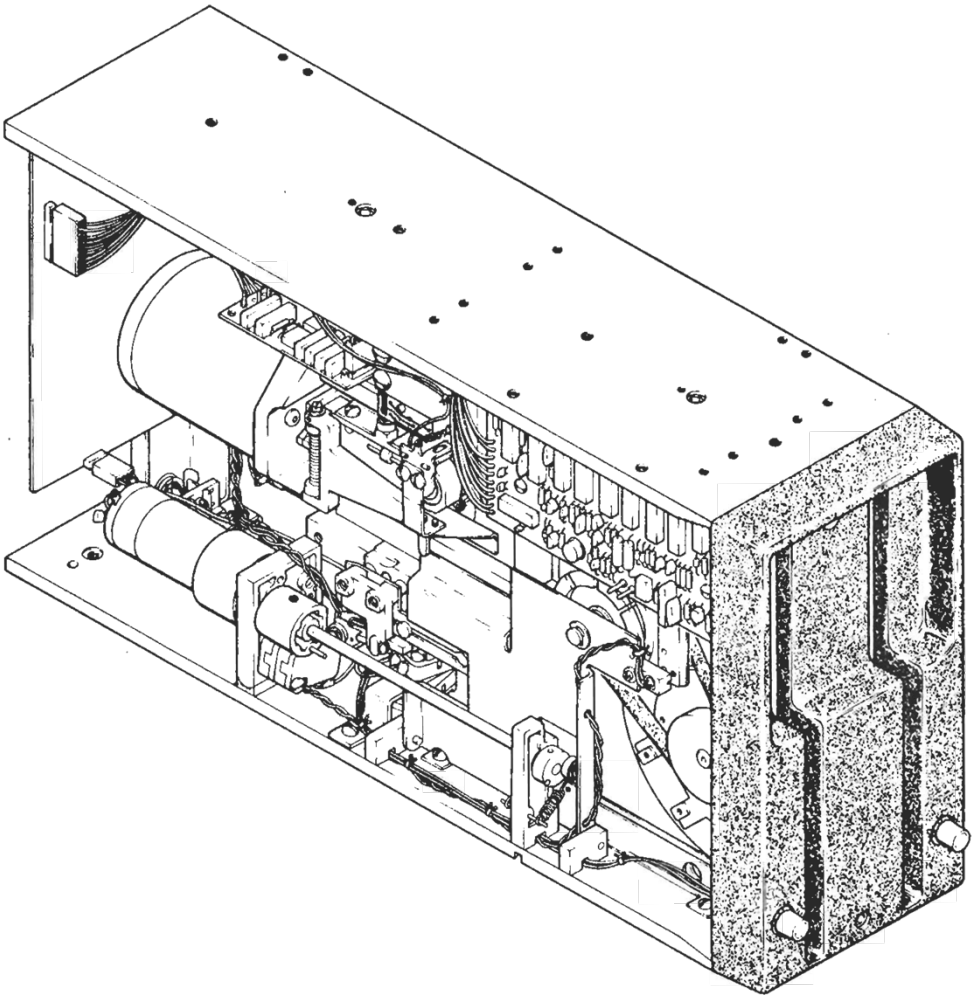

Revision History

Date	Revision	Author	Comments
17 May 2013		M. Eberhard	Initial Release
25 July 2013	1.01	M. Eberhard	
7 Dec 2016	1.02	M. Eberhard	Improve spindle bearing service instructions. Note that if the positioner lamp is an LED, it is infrared. Correct adjustment procedure for IRLED version. Add note about newer Spindle Servo PCBA. Include Ejector Motor inductor repair & voicecoil R&R, and a whole lot more.
	2.00	M. Eberhard	Major Rewrite.

Contents

Introduction 5
Before You Align the Drive 5
PCBA Identification 5
Bearing Service 7
Drive disassembly 7
Frame and Spindle Service 10
Spindle Motor Service 11
Ejector Assembly Service 12
Cone Service 12
Ejector Disassembly 13
Ejector Gearmotor Service 14
Ejector Reassembly and Adjustment 15
Voicecoil Assembly Service 16
Capacitor Replacement 19
Drive Configuration 20
Drive Reassembly 21
Preliminary Power-On Inspection 22
PerSci 27x Adjustment Procedure 23
1. Ejector Cam Inspection and Adjustment 23
2. Pressure Arm Adjustment 25
3. Spindle Bearing Check 25
4. Presence Detect (both units) 26
5. Write Protect Sense and Remote Eject (both units) 26
6. Unit 0 Head Load 27
7. Unit 1 Head Load 27
8. Spindle Speed 28
9. Spindle Instantaneous Speed Variation 28
10. Positioner Lamp Voltage 28
11. Tach Voltage 30
12. Positioner Voltage 30
13. Track 43-1/2 Manual Adjustment 31
14. Dirty Scale Check 31

15. Seek Time 31
See Track 0 - 76 31
Seek Track 0 - 1 32
Seek Track - 76 33
Step Seek and Overshoot 33
16. Unit 0 Index Rough Adjustment 33
17. Cats-eye Unit 0 34
18. Unit 0 Index & Azimuth Adjustment 35
19. Track 0 Sense Adjustment 36
20. Track 43-1/2 Sense Adjustment 37
21. Unit 1 Index Rough Adjustment 38
22. Unit 1 Cats-eye 38
23. Unit 1 Index & Azimuth 39
24. Phase Lock Oscillator 40
25. Separated Clocks and Data 41
26. Resolution Unit 0 42
27. Head Contact Unit 0 42
28. Unit 1 Head Penetration 42
29. Resolution Unit 1 43

Introduction

This paper describes inspection, repair, and alignment of a PerSci 270 272, or 277 floppy disk drive, while attached to a computer that runs Flexer, by Martin Eberhard. (Currently, Flexer runs under CDOS with a Cromemco 16FDC disk controller, under CP/M with a CCS 2422 disk controller, or under PTDOS on a Sol 20 with a Helios disk controller. (The Helios version is called Hexer.)

Before You Align the Drive

By the year 2017, most PerSci 270, 272, and 277 drives have failed. Before attempting to power-up an old PerSci drive, the drive really should be disassembled, cleaned, and inspected. Several components should be replaced as a matter of course, because they are very likely to be bad, or will fail soon.

PCBA Identification

The Data and Interface PCBA is the large PCBA on the right side of the drive:

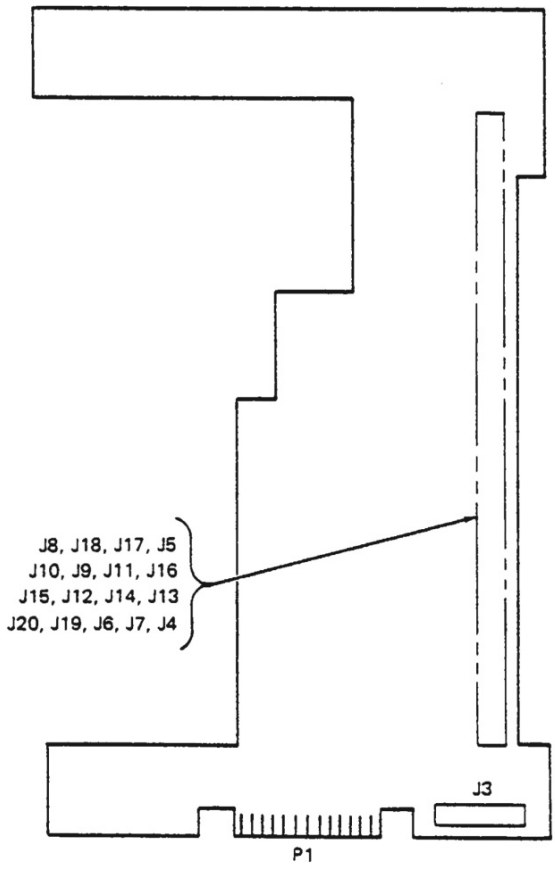

DATA AND INTERFACE PCB

The Positioner Servo PCBA is the board at the back of the drive:

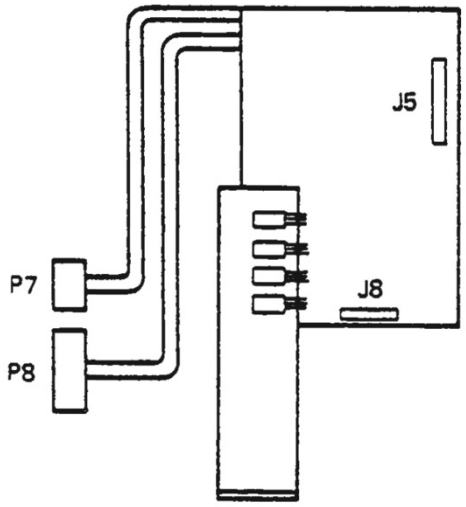

POSITIONER
SERVO PCB

The Phase Locked Data Separator PCBA is on the left side of the drive, near the front if the drive. Some drives do not have a Data Separator PCBA.

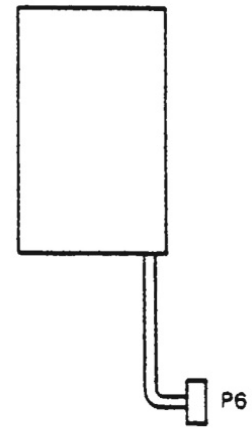

PHASE LOCKED
SEPARATOR
PCB

The Spindle Servo PCBA is beneath the Data and Interface PCBA, on the right side of the drive. The newer-style Spindle Servo PCBA (Assy 200227) has a large crystal to the right of J2. The older-style ones do not.

The Lamp Amp PCBA is located above the positioner servo, accessible from the left side of the drive.

Bearing Service

The PerSci 27x drive has a total of fourteen ball bearing sets, of various sizes. All of these bearings by now have dried-up lubrication, resulting in stiff or rough turning, and noise. Continuing to use the drive without re-lubricating the bearings will cause excessive bearing wear. For this reason, you should just re-lubricate all 14 bearings, even if they seem to move freely.

Occasionally, PerSci drives will have some bearings where the dust cover is crimped or pressed in place, rather than held in place with a slim C-clip. These can be recognized by the crimp marks all the way around the rim of the dust cover. Such bearings cannot be serviced easily, and will require replacement.

This section describes how to service the much more common bearing sets with dust covers held in place by C-clips.

- ☐ Use a pointy tool (such as a sewing needle) to carefully removing the C-clips that hold the dust covers in place on both sides of the bearing. Use a larger needle for the larger bearings, and a smaller needle for the smaller bearings. This takes a little patience! Be sure to hold your thumb over the C-clip across from its open ends while you pick it open with the needle, so that the C-clip does not fly away when it comes free.
- ☐ Carefully remove the bearing dust covers without bending them. (They are made of soft metal, and are easily bent.) If you slip the needle in at the inside edge of the dust cover, it will usually flip up a little, allowing it to be easily removed.
- ☐ Thoroughly flush the bearings with solvent, so that none of the original lubricant remains. A good contact cleaner works well.
- ☐ Re-lubricate the bearing. use a good quality grease that is not silicone based. (Outgassing from silicone grease can damage nearby electrical contacts.) Press grease into the bearings with your thumb, and spin the bearings. Repeat this until the grease comes through to the other side of the bearing.
- ☐ Replace the dust covers and C-clips.
- ☐ Clean all excess lubricant. Spin the bearing to force out excess lubricant and clean it again. Repeat until no further lubricant comes out. Wet a rag with contact cleaner, and use it to wipe the outside surfaces of the bearing clean.

Drive disassembly

The drive is easiest to service when it is disassembled into its major subassemblies, and these subassemblies should be cleaned and inspected as they are removed.

Throughout this document, directions (left, right, top, bottom, front, rear) refer to the drive siting in its normal position, with the diskette entrances vertical and at the front, and the spindle motor toward the bottom.

- ☐ If any of the wiring harness connectors that are plugged in along the edge of the Data & Interface PCBA don't have a "P" label, then use a Sharpie pen to label them with a "P" number that matches the "J" number on the PCBA silkscreen.
- ☐ Take photos of both sides and the rear of the drive before you begin, for reference when you reassemble the drive. Pay particular attention to photograph the harness routing. Remove the two screws that hold the Data & Interface PCBA down, lift it up, and photograph the drive with this board swung out of the way.

- ☐ If either side has a diskette or shipping protector in the drive (or if the spindle cone is just closed against the spindle), then loosen the set-screw (5/64" Allen wrench) on the cam at the end of the ejector shaft, and rotate the cam so that the spindle cone is fully retracted away from the spindle.
- ☐ Remove the black plastic cover over the glass positioner scale by removing the one screw that holds its short bracket to the aluminum frame. (Don't remove the two screws that screw into the black plastic.) Inspect the glass positioner scale. The glass is supposed to be glued to a metal bracket, but sometimes the glue fails, and this fragile piece becomes loose. If it has come loose, gently remove it without scratching or chipping it.
- ☐ If the drive has a front bezel, then pry the two black plastic buttons off of the ejector pushbutton switches. (wrap the shaft of a small screwdriver with a rag, and use it to pry.)
- ☐ Use a 5/16" deepset socket wrench to remove the nuts that hold the ejector pushbutton switches to the front bezel, and remove the lockwashers that are (usually) beneath these nuts. Then remove the switches from the bezel.
- ☐ Remove the two black cap screws (using a 9/64" Allen wrench) that hold the bezel to the drive frame, and remove the bezel
- ☐ This is a good time to insulate the connections on the ejector pushbutton switches, if they are not already insulated. Either use an inch of heat-shrink tubing that's big enough to slip over the switch, or use a dab of silicone glue. (A common, annoying failure during drive service happens when one of these switches shorts out to the drive frame. In later drives PerSci insulated these switches with heat-shrink tubing to prevent this failure during service.)
- ☐ If there is a cable tie holding a wiring harness to the body of either or both of the ejector motors, cut them and remove them. You may need to cut a few more cable ties in the disassembly process. Make a note of them so they can be replaced. (Most of the cable ties will remain as part of the subassemblies that you will remove. These should not be cut.)
- ☐ Unplug P14, and then remove the two screws that hold the rear Data & Interface PCBA hinge to the top endplate, and remove the hinge. Pay attention to the ground wire lug that shares the rear screw of this hinge. Unplug all of the wiring harness connectors from the Data & interface PCBA, and remove this PCBA.
- ☐ Unplug the two connectors on the solder side of the Positioner Servo PCBA. Remove the 3 pan-head screws that hold the Positioner Servo PCBA mounting bracket to the top endplate, and remove the Positioner Servo PCBA.
- ☐ If this drive has a Data Separator PCBA, remove the two cap screws (with a 3/32" Allen wrench) that hold the Data Separator PCBA to the top endplate, and remove the PCBA.
- ☐ Remove the heavy aluminum cable guide that's held in place by 2 large pan-head screws at the rear of the top diskette slot. (The cables for the read/write head may also be clamped with one of these screws.)
- ☐ Remove the two slotted, flat-head screws that hold the metal diskette guide (heat sink) in place on top of the Spindle Servo PCBA. PerSci used a variety of mounting systems beneath this guide, to hold the Spindle Servo PCBA in place, usually including two custom standoffs, and sometimes also including a fiber washer on each. Note the position and orientation of each of these, and then remove them.

- ☐ Note the orientation of the Spindle Motor connector, then unplug it, as well as the Spindle Sensor connector.
- ☐ Remove the pan-head screw in the center of the Spindle Servo PCBA, if it exists. It may have a fiber washer on the component side of the PCBA, as well as a standoff between the PCBA and the frame of the drive (which you cannot see until the PCBA is removed). Note the positions of these components for reassembly.
- ☐ Remove the Spindle Servo PCBA, and recover the standoff below it, if there is one. (on some drives, this standoff is permanently attached to the frame. On very late drives, this screw and standoff were both eliminated, and an adhesive bumper was used in their place.) You will need to slip the wiring harness to the Data & Interface PCBA out to remove the Spindle Servo PCBA. Note the harness routing.
- ☐ Remove (2 pan-head screws) the right-sidemIR-LED index sensor assembly.
- ☐ Unscrew and remove the Spindle Sensor assembly. Clean both the lamp and the photo-sensor with a cotton swab and alcohol.
- ☐ Turn the drive over, and remove the left-side head-lifter assembly, by removing the other pan-head screw. (The first pan-head screw was removed when the cover was removed that protected the glass positioner scale.) Also remove the heavy aluminum cable guide beneath the head lifter solenoid. (On very early drives, the solenoid is mounted on a U-shaped aluminum bracket that is screwed in place from the other side, with a pair of screws through a similar bracket. Remove both brackets, if they exist.)
- ☐ Remove (2 pan-head screws and one cable clamp with a small pan-head screw) the left-side IR-LED index sensor assembly
- ☐ Remove the two cap screws (with a 3/16” Allen wrench) that hold the voicecoil to the aluminum cross member. Remove the four flat-head slotted screws that hold the cross member to the top and bottom end-plates, and remove the cross member.
- ☐ Set the drive upside-down on its top plate, and remove the two cap screws (with a 9/64” Allen wrench) that hold the bottom end plate to the main disk drive frame. The end plate is still held in place by 2 roll pins, and may be a little snug. Carefully pull the bottom end plate, together with both ejector mechanisms, off of the drive. You will need to un-route some wiring harnesses and may need to cut and remove a cable tie or two. Remember (photo) how these harnesses were routed.
- ☐ Be careful with the drive now! Don’t set the drive down on either head mechanism, and be careful not to bump the glass positioner scale. You will need a support for the drive, so that you can lay it flat on your workbench without setting it on the positioner carriage assembly. A 2” block of wood works nicely. The plastic cap from a can of contact cleaner is about the right size too.
- ☐ Remove the belt, and then remove the three pan-head screws that hold the spindle motor to the frame. For some of these screws, there may be a shim washer or two between the motor flange and the drive frame. Retrieve these washers, and record which of the mounting screws had shim washers, so you can put them back the same way.
- ☐ On the right side of the drive is a metal guide, about 3 inches long, that is covered with heat-shrink tubing, for the purpose of guiding the wiring harnesses that move with the positioner carriage. (Remember the drive is upside down now.) This guide is held in place by a pan-head screw that also captures two P-clamps that hold harnesses to the read/write heads. Take a few close-up photos to record the routing of these harnesses, and then remove the screw and clamp.

- ☐ On the left side of the drive, the positioner carriage wiring harnesses are held in place by 2 P-clamps screwed to the drive frame. Take a photo the record the routing of these harnesses, and then remove the screws that hold these clamps down. Slip the harnesses from beneath the plastic frame that is part of the disk ejector.
- ☐ Lay the drive flat on the bench (using a support), with the left side up. Make sure you don't set the drive on the positioner carriage.
- ☐ Remove the two large cap screws (with a 5/32" Allen wrench) near the rear of the drive that hold the positioner assembly to the frame. Hold the voicecoil magnet (so that it does not drop) while you remove the flat headed screw (with a 3/32" Allen wrench) that holds the front of the positioner assembly to the frame, and then remove the positioner assembly from the drive.

Frame and Spindle Service

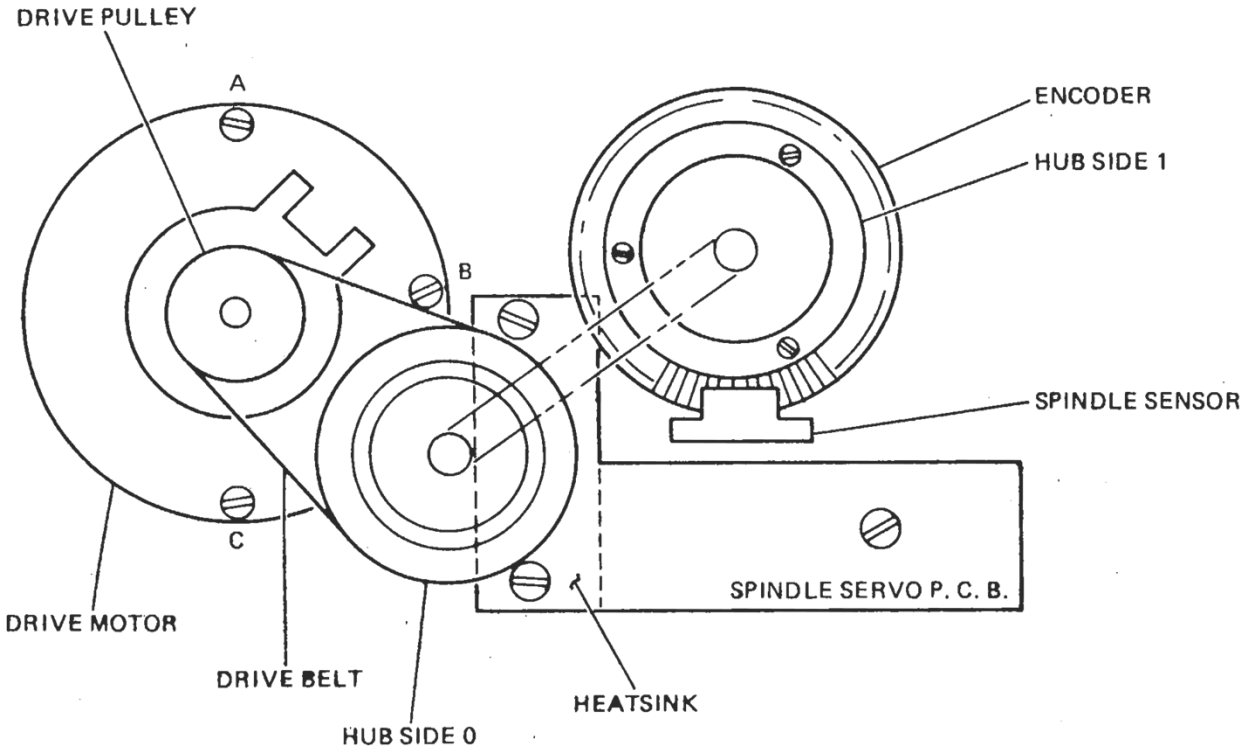

- ☐ Unscrew each component that is still attached to the frame (including the top plate, as well as the diskette guides that are screwed to the top plate) for cleaning, and return them once the component and the frame where the component goes are both clean.
- ☐ Use a small wheel puller to pull the left-side spindle from its shaft. (it is glued to its shaft.)
- ☐ Clean any glue off of the tip of the spindle shaft, where the spindle was just removed, and on the inside of the spindle itself. (Goof Off™ works well for this.)
- ☐ Slide the right-side spindle, together with the shaft out of the bearings.
- ☐ Use a small bearing puller (such as a small pilot bearing puller) to gently pull the two spindle bearings from the frame.
- ☐ Service both bearings, as described in the "Bearing Service" section above.

- ☐ Thoroughly clean the frame in all areas that will no longer be accessible when the spindles are replaced.
- ☐ Carefully align, and then gently tap into place the re-greased (or new) spindle bearings. The handle of a small plastic screwdriver works well for this. Make sure the bearings go in perfectly straight! You should be able to tap them at least a quarter of the way in this way.
- ☐ To fully reinstall these bearings, you will need a 1/4" bolt and a nut, and two flat washers that are at least as large in diameter as the bearings. Use these to press the two bearings completely in place. Pass the bolt through the two bearings, with a washer on either end, and then tighten the nut down until the bearing flanges are in firm contact with the chassis.
- ☐ Slide the spindle shaft (with the right-side spindle) through the bearings from the right side.
- ☐ Test-fit the left-side spindle on the shaft. If the left-side spindle does not slide all the way on easily, then keep cleaning the glue from the shaft and the inside of the left-side spindle.
- ☐ Put a small amount of Krazy Glue™ all the way around the inside of the left-side spindle, and then immediately slide the left-side spindle all the way onto the shaft, such that both the left and right side spindles are firmly against the spindle bearings. Hold the spindles together firmly for a minute or so, for the glue to set.

Spindle Motor Service

Clean and re-lubricate the motor and bearings as follows:

- ☐ Once removed from the drive, the spindle motor is only held together by its magnet. Carefully pry the motor shell apart, using first a knife, then screwdrivers.
- ☐ Take a close-up picture of the exposed end of the shaft, where it goes through the spindle belt pulley, to record about how much of the shaft extends through the pulley. (This is for your reference when you reassemble the motor.)
- ☐ The pancake rotor is held in place by the spindle belt pulley. Loosen the pulley's set screw using a 5/64" Allen wrench, and remove the pulley.
- ☐ Beneath the pulley, there is a thrust washer. Remove this washer.
- ☐ Carefully slide the rotor from the motor bearings. Be careful not to lose the other thrust washer and spring washer that are between the rotor and the housing.
- ☐ Inspect the motor brushes, and replace if necessary. (It is very unlikely that they will need to be replaced.)
- ☐ The motor bearings are pressed into the motor housing. They can be removed with a small bearing puller and serviced. (The motor bearings can also be cleaned and re-greased in place, only opening the accessible side of each bearing.)
- ☐ Once the bearings are good, reassemble the spring washer and thrust washer onto the rotor, and slide it into the bearings.
- ☐ Clean the rotor and the housing (inside and out). Lightly lubricate the rotor where the brushes ride with DeOxit™ Fader™ cleaner.
- ☐ Install the outer thrust washer, and install the pulley. The pulley must be installed on the shaft as close as possible without causing it to scrape or bind when spun. (If it is too high, then the rotor will scrape against the motor magnet.)

- ☐ Reassemble the motor case, making sure the alignment pins on the back housing align with the matching holes on the front housing.
- ☐ Use an external power supply to apply DC (up to 24V) to the motor, and let it spin for a few minutes, to set the brushes.

Ejector Assembly Service

The ejector assembly includes the bottom endplate, the cone lifter arm assembly and ejector motor assembly for each side. If the drive has the remote eject option, then the ejector assembly also includes the two remote eject relays.

- ☐ Inspect all parts of this subassembly, particularly the plastic parts. The plastic supports that hold the front end of the ejector motor shafts sometimes get broken. If one is broken with a clean break, it may be repairable with Krazy Glue™.
- ☐ Look closely at the cams that operate the pair of Microswitches on each side. If the setscrews were ever overtightened, these cams can sometimes be cracked. If so, they will slip on the shaft, and the diskette will not load or eject properly. These cams are not easy to repair if cracked. (I have had a few replicas machined from aluminum, which work fine as replacements.)

Cone Service

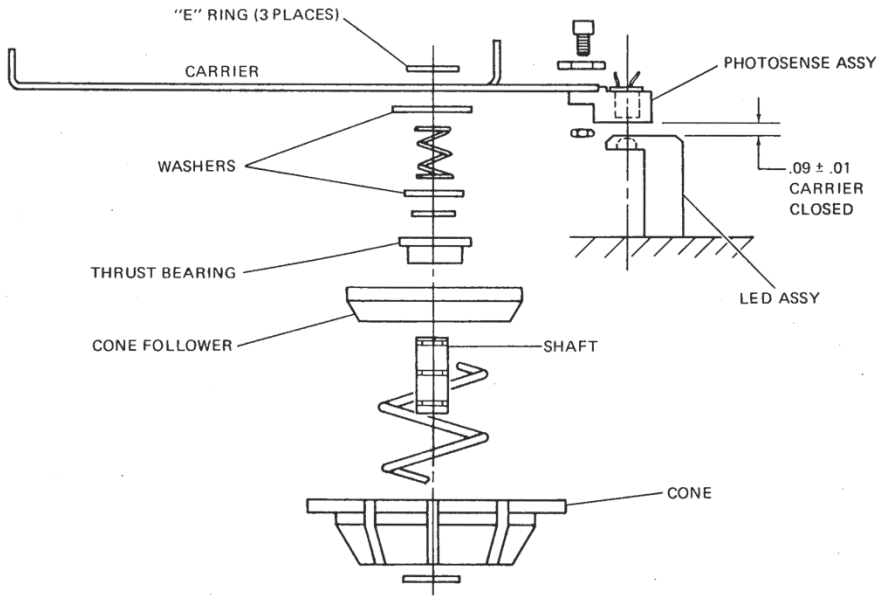

- ☐ Remove each of the two cones from its cone lifter arm by removing the E-ring on the cone lifter arm, using a small screwdriver. (put your thumb over the E-ring, so it does not fly off when it is removed.)
- ☐ When the E-ring is removed, there is a conical spring and a washer on the shaft that holds the cone itself. Recover these parts and set them aside.
- ☐ Remove the E-ring that holds the cone shaft to the cone, on the top side (farthest from the spindle), and then recover the thrust washer on the shaft. Pull the shaft out of the cone.
- ☐ The bearing can now be pushed out of the cone and serviced, as described above.
- ☐ Carefully clean the cone itself, and the other parts.

- ☐ Reinstall the cone shaft into the cone, and gently push its E-ring back in place with a screwdriver
- ☐ Slide the cone shaft washer back onto the cone shaft, and set the spring onto the shaft, with its smaller end closest to the cone.
- ☐ Set the cones aside while the rest of the ejector mechanism is serviced.

Ejector Disassembly

On each side:

- ☐ Use a pair of needle-nose plyers to unhook the two ejector arm retractor springs from the roll pins through the plastic supports on each side. Leave them hanging loose on the cone arms.
- ☐ Remove the two slotted cap screws that hold the plastic support farthest from the ejector motor.
- ☐ Remove the two slotted cap screws that hold the gearmotor support to the drive chassis. Be careful to retrieve the two black plastic spacers that were between this support and the drive chassis. (The top one will be held in place by the gearmotor's chassis-ground wire, but the other will fall out when the screw is removed.)
- ☐ Lift the shaft-end of the gearmotor up enough that you can access the two screws holding the two microswitches to the gearmotor support bracket, and then unscrew these two screws. Leave these screws in the microswitches, to hold them together for reassembly.
- ☐ De-solder the wires that attach to the ejector motor. (There are ground wires attached to the terminal that has the bare ground wire to the frame, and one wire on the positive terminal). Do not overheat the posts on the rear of the ejector motor, as they will pull out if you do. Remember which motor goes on each side. The gearmotor should now be completely free from the rest of the assembly.
- ☐ Unscrew the 2 cap screws (with a 3/32" Allen wrench) that hold the front hinge for the cone arm to the endplate. Slide the cone arm forward, and recover the small spring on the rear hinge pin.
- ☐ Unscrew the 2 cap screws that hold the rear hinge, and move the cone arm out of the way. (It is still connected by a wiring harness.)
- ☐ Thoroughly clean the cone arm, being careful not to damage the two foam blocks that prevent diskette jacket vibration.
- ☐ Check the condition of the two foam pads on the diskette side of each of the two cone arms. These may be dried out and crumbling, or missing. If so, they can be replaced using two pieces of soft 3/8" x 3/8" weather-stripping insulation foam, available with an adhesive back. (There are marks on the arm indicating the correct locations for these pads.)
- ☐ Note the orientation of the plastic bracket on the gearmotor shaft, and then loosen the hex screw (with a 5/64" Allen wrench) that holds the cone-load cam (with the small ball bearing set) on the end of the shaft. remove both this cam and the plastic support bracket.
- ☐ Loosen the hex screw on the switch cam (with a 5/64" Allen wrench), and slide it off of the shaft.
- ☐ Note (photo) the orientation of the gearmotor on its plastic bracket, so you can put it back the same way.
- ☐ Remove the 3 pan-head screws that hold the gearmotor to its plastic support bracket and slide the support bracket off the shaft.

Ejector Gearmotor Service

The 1 µF tantalum capacitors on the rear of the gearmotors almost always fail and become a short circuit soon after an old drive is powered up. This will result in the destruction of the two inductors on the rear of the motor, as well as a couple of resistors on the Data and Interface PCBA. For this reason, you should definitely replace these capacitors, if they are original.

The two ejector gearmotors are not interchangeable because they are wired to turn in opposite directions. This means that the diodes and tantalum capacitors on the back of the motors are installed with opposite polarities, and opposite motor poles are connected to ground. However, servicing the two gearmotors is similar.

- ☐ It is easiest to just cut the old capacitors out and leave the stubs of their leads in place when you solder in new capacitors.
- ☐ Sometimes a failed capacitor will cause one or both of the two inductors on the rear of the motor to become discontinuous. Before installing new capacitors, use an ohmmeter to check the continuity of these inductors. If either one is discontinuous, it can be repaired:
  1. Gently pry the inductor off of its glue.
  2. Pull the old wire out of the ferrite bead.
  3. Rewind the inductor with 8 turns of similar varnish-insulated wire (You can usually find this fine wire inside the small transformer of a junk AC wall adapter.)
  4. Strip 1/4” of insulation varnish from each end of the wire, using very fine sandpaper.
  5. Re-glue the inductor with a dab of silicone calk.
  6. Re-solder the leads of the inductor to the binding posts
- ☐ Carefully solder new 1 µF, 35V (or higher voltage rating) tantalum capacitors where the old ones were removed. Note the orientation: the two motors in the drive are not wired the same! For both motors, the negative end of the capacitors should be on the side of the motor that has the bare ground wire that went to the drive endplate. On the left motor, the black motor wire is the negative wire. On the right motor, the red wire is the negative wire.
- ☐ The most common failure mode for these gearmotors is that the nylon spur gear on the motor shaft inside the gearbox has cracked, causing it to slip or jam, or to make a clicking sound with each revolution.
- ☐ Use a bench supply to test the gearmotor. Slowly turn the voltage up until you hear the motor turning. If it does not make any sound by the time you reach 5V, then stop! Double-check the orientation of the new capacitors that you installed. In these are ok, then you probably have a cracked spur gear.
- ☐ If the motor makes sound, but the shaft does not turn, or if the motor makes a clicking sound every second or two, then you probably have a cracked spur gear.

  It is possible to replace this spur gear, if you can find a replacement part. The gear has an unusual profile, and I have not found a suitable replacement. However, I have successfully had replica gears 3D-printed from nylon, and they work great. Here are the specifications for the spur gear:

  Teeth: 8
  Thickness: 0.125” (3.2 mm)
  Bore diameter: 0.06” (1.54 mm)

Pressure angle: 20 degrees
Diametrical Pitch: 48
Module: 0.5291
Shift: -0.012" (-0.305 mm) (shift tooth faces outward 0.012")
Outside diameter: 0.224" (5.7 mm)
Root diameter: 0.13" (3.41 mm)

- ☐ Even if the gearmotor sounds fine, open the gearbox and refresh its grease.
  1. Remove the two flat-head slotted screws that fasten the cover of the gearbox and gently open the gearbox.
  2. Be careful to observe the position of the spacers on two of the gear shafts. (These spacers may be stuck to the grease inside the cover you just removed.)
  3. Slide the 3 gears and 2 spacers off of their shafts, noting their original positions. Clean everything.
  4. Each of the 3 shafts has a spacer beneath its gear. Leave these in place.
  5. If the spur gear is cracked:
     a. Pry the spur gear off of the motor shaft. (It is probably cracked between two of its teeth.)
     b. Press the new spur gear onto the motor shaft.
  6. Lubricate all 3 shafts with synthetic (non-Silicone) grease such as Molykote G-4700 Extreme Pressure Pure Synthetic grease.
  7. Slide the 3 gears and their spacers back onto their shafts, and lubricate their teeth generously with the same grease.
  8. Put a little grease on the tip of the output shaft, and lubricate its gear.
  9. Reinstall the gearbox cover and output shaft, and thoroughly clean the outside of the gearmotor. Use contact cleaner on a rag to clean the outside of the gearmotor.
  10. Label the gearmotor "Lubrication and New Spur Gear <date>".

Ejector Reassembly and Adjustment

- ☐ Clean the plastic brackets, the cams, the shaft, and the endplate where accessible. If any of the springs are rusty, soak them in Krud Kutter® for a while to remove the rust. Rimsw with water, and dry.
- ☐ Reattach the cones (each with a washer and spring) to the cone arms with their E-rings.
- ☐ Reinstall the rear cone arm hinge. Put the small spring back on the hinge pin, and reinstall the cone arm by reinstalling the front cone arm hinge.
- ☐ Reattach the gearmotor to its plastic support bracket in its original orientation with 3 pan-head screws.
- ☐ Slide the microswitch cam onto the shaft in in its original orientation, with about 1/16" clearance from the plastic gearmotor support bracket.
- ☐ Clean and re-lubricate the two tiny bearings on the cone-load cams: For each, remove its E-ring, remove the bearing, and remove service the bearing, as described above, using a good-quality grease to re-pack the bearing. Reinstall the bearing when done.

- ☐ Slide the other plastic bracket (with its bronze bushing) onto the ejector shaft in its original orientation (such that the flange of the bushing is toward the end of the shaft).
- ☐ Install the cone-load cam onto the shaft such that its slot aligns with the pin on the microswitch cam, and such that the tip of the shaft just protrudes from the cam. Tighten the setscrew snugly.
- ☐ Reattach the microswitches to the gearmotor support bracket with 2 pan-head screws.
- ☐ Loosely screw the gearmotor bracket to the drive chassis, inserting the two black plastic spacers between the bracket and the chassis. Make sure the outer screw also captures the gearmotor's ground wire. Be sure not to pinch any of the wires that pass between the bracket and the chassis.
- ☐ Screw the arm support to the drive chassis, routing the wires beneath it, as it was originally. Be sure not to pinch any of the wires that pass between the support and the chassis. Tighten all 4 screws.
- ☐ Use needle-nose pliers to re-hook the two springs that lift the pressure cone arm off of the spindle.
- ☐ Perform the cone arm adjustment in step 1 of the Alignment Procedure below.<<<<LATER!!

Voicecoil Assembly Service

The voicecoil assembly is the most delicate and also the most critical part of the drive. There are several common failures in this subassembly, each of which should be repaired as needed. Common failures:

- The rails and the outside surfaces of the bearings are dirty, causing the carriage not to move smoothly.
- The bearings are dried out and don't roll easily.
- The black rubber O-ring that serves as the inner end-stop for the positioner carriage is usually cracked and hardened, if not outright missing. (This O-ring should be on the lower rail on which the positioner carriage rides.)
- The glass positioner scale has come unglued from its metal bracket.
- The glass reticle on the positioner sensor has come unglued form the sensor. (Some drives do not have a glass reticle.)
- One or both of the read/write pressure pads is damaged or missing.
- The servo lamp is burnt out.

- ☐ Cleanliness of the voicecoil assembly is especially important, so make a point of cleaning everything along the way as you service the voicecoil assembly.
- ☐ The lamp may be an infrared LED or a grain-of-wheat incandescent lamp. The lamp is in the small plastic box above the positioner scale. If the removable cover (4 screws) of this box has component leads coming through it, then the lamp is an infrared LED. If it is a plain plastic cover, then it is an incandescent bulb.

  You can test an infrared LED by applying 2.0 volts (maximum!) with a bench supply, and observing whether or not the LED draws current. (I have never seen this component fail.)
- ☐ Test an incandescent lamp with 1.5 volts (maximum!) and observe the visible light. If you need to replace an incandescent servo lamp, it is a "T1" style lamp, rated for 20 mA at 2.5V. This lamp should draw close to 100 mA at 1.5V (which is the lamp's operating voltage in the PerSci drive).

If you cannot find the exact lamp, you can substitute with a T1 lamp that is close, and then adjust the lamp voltage so that it draws the same power as the original, 150 mW. (You can measure the lamp's current by measuring the voltage across [R15 in parallel with R21], and then dividing by the combined resistance of these resistors (which is nominally 34 ohms, but you should measure them carefully).

I have done this successfully with a T1-style lamp that draws about 150 mA at 1.5 volts (which was far too bright). This lamp's current was reduced to 146 mA when I adjusted R1 to set TP 7 to 1.06 volts, for a lamp power consumption of 154 mW. With this adjustment, the drive works perfectly. I put a sticker on the positioner scale cover alerting future technicians that the correct adjustment voltage is 1.06 volts, rather than the specified 1.5V.

- ☐ To replace the positioner servo lamp:
  1. Remove the four small Philips screws from the black or brown lamp housing.
  2. Carefully de-solder the lamp leads from the Lamp Amp PCBA. Avoid any splashing of solder!
  3. Insert the new lamp and solder it in place.
  4. Use a drop of Krazy Glue© to attach the lamp to the mating groove in the lamp housing's top cover.
  5. Re-install the black cover.
- ☐ Remove the lamp amp PCBA by removing two cap screws with a 3/32" Allen wrench.
- ☐ Replace C4 on the Lamp Amp PCBA (always): 1 µF, 35V tantalum capacitor.
- ☐ The voicecoil magnet is held onto the positioner with 3 cap screws (only 2 on very early drives). Slide the carriage all the way out, and then remove these cap screws (with a 7/64" Allen wrench) to remove the magnet. (Note that when 3 screws are used, one of them is longer than the other two.)
- ☐ Remove the felt disk from the tip of the magnet assembly, that serves as the outside end-stop for the carriage. Use compressed air to blow any contamination out of the voicecoil. (Some contamination may be magnetically stuck to the magnets inside the assembly.)
- ☐ Inspect the 3 magnets inside the assembly. If any of them has come loose, it will probably have slipped further into the cylindrical housing than the others. If a magnet has come loose:
  1. Pull the loose magnet out needle-nosed plyers
  2. Thoroughly clean the magnet, removing any old glue.
  3. Use a toothbrush to clean the glue surface inside the cylindrical housing, and blow it all clean again with compressed air
  4. Use 5-minute epoxy to glue the magnet back in place, carefully positioning it to be the same depth as the other magnets, and equally spaced from them. (There is no need to clamp the magnet while the glue dries – the magnetic force will do the clamping for you.)
- ☐ rotate the felt disk that serves as the outside end-stop for the carriage. (The two screws inside the actual coil bump against the two holes in the plastic disk on the tip of the magnet, where the felt is exposed.) Rotating the felt (while keeping the orientation of the plastic disk) will position fresh felt for the end stop.
- ☐ Remove the screw (slotted or cap) that holds the rail on the glass scale side to the frame. (On newer drives, this screw holds a little bracket. On early drives, it is a set-screw.) Slide the rail out.

- ☐ Carefully unscrew and remove the glass scale assembly. Set this aside where it will not get damaged!
- ☐ If the glass positioner scale has come loose from its glue:
    1. Completely remove all glue from the bracket. (It can usually be chipped off.)
    2. Look closely at the scale. The side without the silver pattern printed on it is the bottom, and is the side that should be glued to the bracket. The top side has the word "UP" printed on it. The edge that has the word "UP" is the edge that should be glued to the bracket. The correct position for the scale on the bracket is such that the bracket is centered on the scale, and the edge of the bracket aligns with the edge of the silver pattern that is printed on the glass. Practice aligning the two parts, so that you are sure how they belong.
    3. Clean the bracket and the bottom of glass scale with alcohol, so that the surfaces to be glued are perfectly clean and without oil. Be careful not to scratch the markings on the glass scale.
    4. Support the bracket on your workbench, so that it sits flat, with the screw-hole end sticking up. Find something to use as a gluing shim that is a little thicker (1/16" or so) than the bracket's sheet metal. (The shim should be thicker to account for the thickness of the glue.)
    5. Mix a drop of 5-minute epoxy, and spread it carefully onto the bracket where the scale will go. Try to spread it evenly, and about 1/16" thick. Make sure none of the glue overhangs the edge of the bracket.
    6. Carefully place the scale onto the glue and the shim, positioning it as perfectly as possible. Try to make it parallel to the workbench top, and parallel to the bracket. Make sure the edge of the bracket aligns with the silver pattern's edge on the scale.
    7. Let the glue cure overnight before touching it again, then clean the glass again with alcohol.
    8. Clean the glass reticle on the lamp amp PCBA, if it is glass.
- ☐ Remove the screw that holds the other rail to the frame. Slide the rail out, freeing the carriage. (Sometimes this rail is also glued in place at the magnet end, and require some effort to remove. You can tap it out from the magnet end.)
- ☐ Each of the six tiny carriage bearings can now be removed by removing its snap-ring, and then serviced as described above. These take a bit of patience to open, particularly when their grease has dried out and has "glued" the C-clip in place.
- ☐ Reinstall the rail farthest from the glass scales side, installing a new end-stop O-ring as you do. (The replacement end-stop O-ring should be 1/4" inside diameter, 1/2" outside diameter.)
- ☐ Reinstall the glass scale, temporarily positioning it as low on its mounting screws as possible.
- ☐ Carefully reinstall the rail on the glass scale side. One of the bearings on this side of the carriage is spring-loaded, and you must gently compress this spring as you insert the rail. Make sure both rail set screws are snug.
- ☐ Reinstall the magnet in its original orientation, and make sure the carriage moves freely. Bump the carriage against the magnet end stop, to make sure the screws are hitting the felt and not the plastic disk.
- ☐ Reinstall the Lamp Amp PCBA, positioning it in the middle of its front-to-back adjustment range.
- ☐ Adjust the position of the glass scale so that it is perfectly parallel to the glass reticle. If it is tilted, you can shim the bracket a small amount with Kapton™ tape and/or a very thin washer. Also adjust the sensor assembly on the Lamp Amp PCBA so that the gap at the front of the sensor is the same as the gap at the rear of the sensor. The scale should be spaced from the reticle only about the thickness of 2 pieces of paper. Make sure they don't actually touch when the carriage moves!

- ☐ Inspect both read/write head pressure pads to make sure there is still plenty of padding material beyond their plastic cups. If the pressure pad is damaged or missing, it should be replaced. (I have made replacement pads using a 5/32” diameter circular punch to punch out a small disk of adhesive-backed 1/16” high-density felt.) Be sure to clean out all of the original pad material and its adhesive backing before installing the new pad.
- ☐ Clean everything a final time using isopropyl alcohol, especially the glass scale, the carriage rails and bearing surfaces, and the read/write heads.

Capacitor Replacement

Aside from the tantalum capacitors on the ejector motors and the Lamp Amp PCBA that were replaced above, the following capacitors should be replaced on the remaining PCBAs. These are all 1 µF, 35V tantalum capacitors that have experienced 24 volts, and are subject to imminent failure.

- ☐ If the Spindle Servo PCBA is the kind without a crystal (assembly number 20133) then replace C3. (24 volts is not used on the newer Spindle Servo PCBA, assembly number 200730.)
- ☐ On the Positioner Servo PCBA, replace C13
- ☐ If the Data Separator PCBA is a single-density board (assembly number 200115), replace C1. If the Data Separator PCBA is a double-density board, (assembly number 200259) replace C13.
- ☐ On the Data and Interface PCBA, replace the following capacitors: C10, C17, C29, C33, C39 (Note that the orientation of these capacitors is inconsistent. Pay attention to the PCBA markings!)

Drive Configuration

Set up the drive for the target system by setting the jumpers, mainly on the Data & Interface PCBA. Here are the jumper settings for some common configurations. For more configurations, see "PerSci 27x Configuration.xlsx by Martin Eberhard."

			Cromemco PFD (Model 277)	**PT Helios (Model 270)**		
		200263-000 PCBA Revision:	H through M	Through G	H through M	N and Later
Jumper	**Near IC**	**Function**	**Jumper**	**Jumper**	**Jumper**	**Jumper**
U11		Drive Select	Drive 0: 2-13, 4-11 Drive 1: 1-14, 6-9	3-12=DS1, 5-10=DS2	3-12=DS1, 5-10=DS2	3-12=DS1, 5-10=DS2
Sector 0	U16	Hard Sectors	No Jumper	32	32	32
Sector 1	U27	Hard Sectors	No Jumper	-----	32	32
A,B,C	U17	P1 pin 46 function	A-B	A-B	A-B	A-B
D,E	U17	Disk select/drive select	No Jumper	D-E	D-E	D-E
F,G	U17	Disk select/drive select	No Jumper	F-G	F-G	F-G
H,J,Z	U4/U3	Disk select/drive select	J-Z	H-J	H-J	H-J
K,L	U8	Combined Write Protect Output	K-L	No Jumper	No Jumper	No Jumper
M,N,P	U3	Head Load Behavior	N-P	M-P	M-P	M-P
R,S,T	U3	Head Load Behavior	S-T	R-S	R-S	R-S
U,V	U9	Combined Index Output	U-V	No Jumper	No Jumper	No Jumper
W,X,Y	U10	Hard/Soft Sector	W-X	W-Y	W-Y	W-Y
AA,AB,AC,AX	U15	P1 pin 20 function	AB-AC	AA-AB	AA-AB	AA-AB
AD,AE,AF	U10/U15	Hard/Soft Sector	AD-AE	AD-AF	AD-AF	AD-AF
AH,AJ,AK	U10	P1 pin 8 function	AH-AJ	AH-AK	AH-AK	AH-AK
AL,AM,AN	U1	P1 pin 24 function	AL-AM	AL-AM	AL-AM	AL-AM
AP,AR	U8	Combined Ready Output	AP-AR	No Jumper	No Jumper	No Jumper
AS,AT,AY	U3	Combined Remote Eject	AS-AT	AT-AY	AT-AY	AT-AY
AU,AV,AW	U39	Clear dir. Select when on track	-------	AU-AW	-------	-------
AU,AV,AW	U11	P1 pin 4 function	AV-AW	-------	AU-AW	AU-AW
BA,BB,BC	U10/U3	P1 pin 8 function	BA-BB	BA-BB	BA-BB	BA-BB
BD,BE	U7	P1 pin 10 = Seek Complete	BD-BE	BD-BE	BD-BE	BD-BE
BF,BG,BJ	U19	Data Sync	No Jumper	BH-BJ	BH-BJ	BH-BJ
BK,BL,BM	U3	P1 pin 20 function	BK-BM	-------	BK-BM	BK-BM
W1	J3	Signal Ground = Frame Ground	Jumper	Jumper	Jumper	Jumper
Component	**Near IC**	**Function**	**Value**	**Value**	**Value**	**Value**
R88	U10	Hard/Soft Sector, 74123/74221	36K	-------	11K	4.75K
R94	U10	Hard/Soft Sector, 74123/74221	36K	11K	11K	4.75K
C36	U25	Delete for "pulse detection"	0.1 uF	0.1 uF	0.1 uF	0.1 uF
C40	U10	Hard/Soft Sector, 74123/74221	0.1 uF	-------	1 uF	1 uF
C41	U10	Hard/Soft Sector, 74123/74221	0.1 uF	1 uF	1 uF	1 uF
U10		74221=Better 1-shot	74123	74123	74123	74221
U16		Fewer than 32 Hard Sectors	No Component	No Component	No Component	No Component
U27		Fewer than 32 Hard Sectors	No Component	-------	No Component	No Component
U59		P1 pin 16 function	75453	75453	75453	75453

Drive Reassembly

Make sure everything is clean before reassembly. As you install each subassembly, double-check your photos from the disassembly, to route the wiring harnesses the right way. Make sure they are all completely out of the way of the positioner carriage and also completely clear of either diskette when inserted. Most of the wiring harnesses will go to the Data and Interface PCBA, which will be installed last. So just route the harnesses and leave them in their approximate position as you go.

- ☐ Reinstall the Spindle Sensor assembly.
- ☐ Reinstall the IRLED index sensor assembly from each side of the drive, including the P-clamp that fixes the cable to the frame on the right side. The left and right sensors are different, so be sure to put the correct one on each side. Route the wires the way they were originally.
- ☐ Reinstall the spindle motor into the disk drive chassis, replacing the spacer washers as they were originally installed.
- ☐ Clean, and then reinstall the spindle belt. Adjust the belt tension by loosening the motor screws and shifting the motor as needed. (The belt should be tight.)
- ☐ Test the belt tension and alignment by powering the spindle motor from a bench power supply. If the belt does not ride centered on the motor pulley, or if it slips off, then try changing the positions of the shim washers beneath the spindle motor.
- ☐ Reinstall the Spindle Servo PCBA. Route its wires correctly as you put it in place. Depending on the drive, you may have to position a fiber standoff beneath the board, and then feed a screw (with a fiber washer) through the board, through this standoff, and into the threaded hole in the frame. Plug the spindle tach sensor and the spindle motor wires back into the Spindle Servo PCBA.
- ☐ Reinstall the two standoffs and the diskette guide above the Spindle Servo PCBA.
- ☐ Reinstall the Positioner Servo PCBA, with 3 slotted screws. Plug the Lamp Amp harness and the voicecoil harness into the solder side of the Positioner Servo PCBA.
- ☐ Reinstall the voicecoil assembly on the drive frame, first installing the hex-head flat screw near the center of the drive, and then the two cap-screw. Center the voicecoil in its azimuth adjustment, and tighten the screws enough that the voicecoil won't move. (Azimuth will be adjusted later, during alignment.)
- ☐ Route the voicecoil wires the same way they were routed originally and Replace the cable clamps and guide for the wires to the voicecoil assembly. Adjust the free length of the cables to the positioner carriage such that they do not restrict carriage movement, and do not interfere with anything else as the carriage moves.
- ☐ Reinstall the left-side head-load solenoid assembly. (If this is an early drive, then also reinstall the U-shaped brackets that hold the solenoid first.)
- ☐ Reinstall the black plastic guard for the glass positioner servo slide.
- ☐ Reinstall the top endplate with the ejector mechanisms, being careful to route the wires the way they were, and being sure you don't pinch any wires. Make sure the left-side ejector arm is beneath the plastic arm holding the pressure pad. Install the 2 cap-screws that hold the endplate to the frame.

- ☐ Reinstall the aluminum cross-member with 2 slotted flat-head screws from each side. Reinstall the two cap screws (each with a flat washer and a split washer) that hold the voicecoil clam to the cross-member.
- ☐ Insert an expendable diskette, and spin the disk in the sleeve such that the index hole is centered in the matching hole in the sleeve. Slide this diskette in each side, and use it to align the position of the two IRLED assemblies. These should each be Centered beneath the index hole in the disk.
- ☐ Reinstall the Data Separator PCBA with 2 cap screws.
- ☐ Plug all of the connectors into the Data & Interface PCBA except the one on either end. Match the ”P” number on the connector label with the “J” number on the Data & Interface PCBA.
- ☐ If any of these connectors feels at all loose when you reinstall it, then adjust the connector’s contacts. (This will eliminate some intermittent failures later on.)
    1. Disconnect the connector from the Data and Interface PCBA
    2. Release each pin from the connector body using a small screwdriver. (Do these 1 pin at a time, so you know where they go.)
    3. Gently bend the contact open a tad with a small screwdriver (replace it if it breaks)
    4. Re-insert the pin into the contact body
    5. Reconnect the connector
- ☐ Hook the front hinge of the Data & Interface PCBA, and then install that end’s connector.
- ☐ Hook the rear hinge pin into the PCBA hinge hole, and screw it into place, capturing the ground wire lug into the rear screw. (The lug should be between the screw head and the hinge.) Install the rear connector into the PCBA.
- ☐ Replace the wire ties that were removed during disassembly. In particular, make sure no wiring harnesses can interfere with the insertion and removal of a diskette, or with the movement of the positioner carriage.

Preliminary Power-On Inspection

1. Connect power to the disk drive and check all of the power supply voltages. If the 24V supply is close to 0 volts or if you see smoke form a resistor, then you have probably missed one of the tantalum capacitors, or you have installed one backwards.
2. Look to see if the spindle servo lamp is lit. This should be visible through the right-side diskette entry slot. If it is not lit, power the drive off and debug.

> **WARNING:** Many of the Op-Amps (in 8-pin DIP packages) used in the PerSci drive are powered by +24V. The outputs of devices often drive TTL devices, swinging between about 0V and about 4V. If you accidentally short the 24V supply pin (pin 8) of an Op-Amp to the adjacent output pin (pin 7), you will probably destroy every TTL device that is driven by the Op-Amp.

PerSci 27x Adjustment Procedure

The following is the recommended alignment procedure for the PerSci Model 27x Disk Drive. This procedure requires the following components:

- A Z-80 based computer with a Cromemco 16FDC Floppy Disk Controller running CDOS, or
- a Sol-20 with a Helios drive, running PTDOS
- At least 16K of available zero wait-state memory starting at address 0
- A PerSci 27x floppy disk drive, configured for use with the 16FDC
- A suitable power supply for the PerSci drive
- Cables between the PerSci drive, the power supply and the floppy disk controller
- Martin Eberhard's Flexer program
- Schematic diagrams for the correct revision of PerSci 27x drive
- A decent oscilloscope - 50 MHZ or better, at least dual trace with a third channel for triggering
- Several screwdrivers and Allen wrenches
- Windex cleaner
- 95% Isopropyl alcohol and cotton swabs
- A decent non-silicon-based grease
- Light bearing oil
- A Dysan alignment diskette
- A scratch single-sided soft-sectored diskette (not a defective diskette!)

1. Ejector Cam Inspection and Adjustment

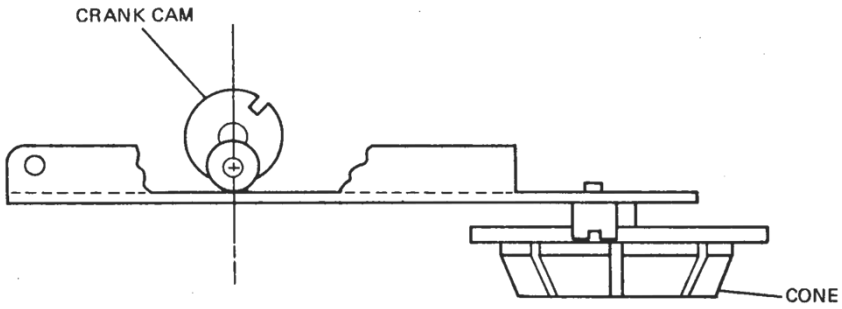

The ejector motors should load the spindle cone and the head when a diskette is inserted, and should unload the cone and the head, and eject the diskette when the eject button is pressed.

Because the ejector cam (which is mounted over the two microswitches in front of the ejector motor) is made of plastic, and its set screw is steel, these cams sometimes come loose and misaligned. With time, these ejector cams also can crack, and must be replaced. If the cam is loose or cracked, the cone will not engage or disengage properly. To align the cam:

1. With the power off, loosen the cam's set screw
2. Turn the power on and press the eject switch. Rotate the cam manually until the door is fully unloaded.
3. With the door fully unloaded, rotate the cam until the set screw is pointing directly away from the drive, and tighten.
4. Manually trip the diskette presence detector switch, and check to see that the cone seats completely into the spindle. Readjust as necessary.

5. Check the adjustment by inserting and ejecting a diskette several times.

The ejector assemblies have several common failure modes:

1. The plastic cam that activates the microswitches may be cracked, and slips on the shaft. This may cause the shaft to spin continuously, or cause the ejector assembly to stop at the wrong position.
2. The spur gear on the motor shaft (inside the gearbox) is cracked, and either spins on its shaft (causing the motor to run continuously) or jams (causing the motor to draw current continuously). An early indication of this failure mode is a clicking sound from the gearmotor as it turns. Either the whole ejector gearmotor assembly must be replaced, or this spur gear must be replaced, as described above.
3. One or both of the plastic support frames for the ejector shaft may be cracked, or its screw holes have become stripped. This will cause portions of the ejector assembly to be loose or wobbly.

Any of these failures will require a replacement part - most likely scavenged from another PerSci drive. See Appendix 2 for ejector gearmotor service.

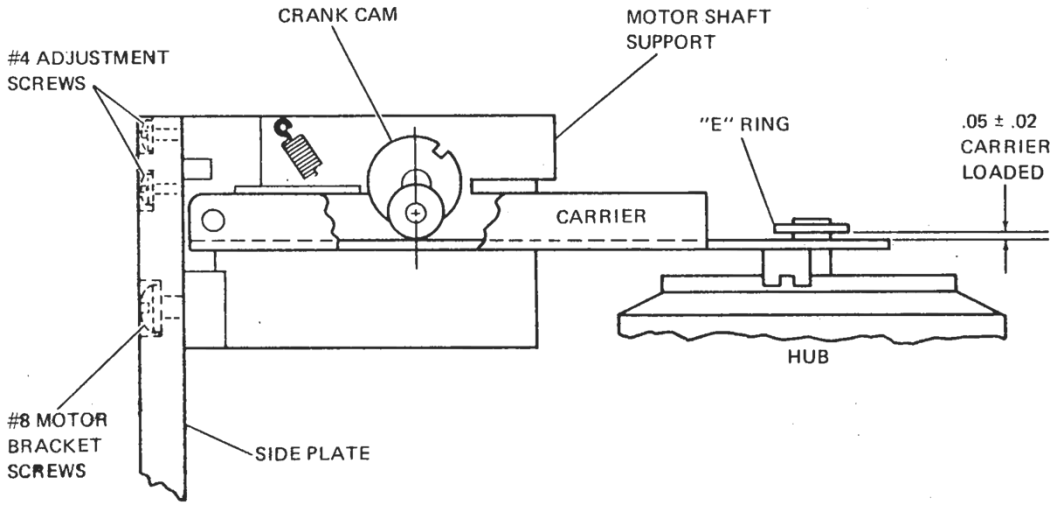

☐ Test and adjust the pressure of both cones as follows:

1. Loosen the set-screw on the cam (with the tiny bearing) that loads the cone.
2. Rotate the cam so that the arm is completely loaded, i.e. the bearing is all the way down against the cone arm.
3. Look at the shaft through the cone that holds it to the cone arm. It should now be protruding through the cone arm so that its E-ring is lifted off of the cone arm. If the E-ring is still in contact with the cone arm, then the cone is too loose, and the diskette will slip.
4. There still should be some free travel if you press the cone arm against the spindle. Firmly press the cone arm, and look at the cam bearing. If it is still in contact with the cone arm, then the cone is too tight, and the plastic support will break (again).
5. A small amount of adjustment is possible by loosening the screws for the plastic bracket and the cone arm hinges, and repositioning these parts. Try this first, and re-test for correct cone pressure.

6. If further adjustment is necessary, then you must slightly bend the cone arm (which is a fairly stiff piece!) DO NOT use bend the arm against plastic bracket or it will break!

> **Note:** At this point, it is necessary to have the Flexer program loaded and running. You should see the % prompt.

2. Pressure Arm Adjustment

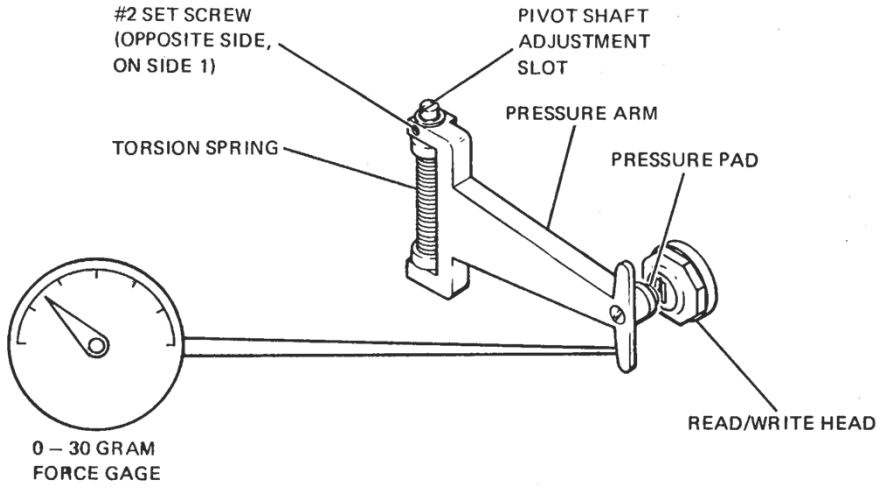

Activate the Unit 0 disk presence detection switch to cause Unit 0 to load

- ☐ Use Flexer to load Unit 0's head:

  %**SE U=A <CR>** (select unit 0)
  %**HL 1 <CR>** (load head)
- ☐ Use a force gage to measure the head load force. The correct force is 18±4 grams
- ☐ Adjust the force by loosening the set screw, turning the pivot screw, and retightening the set screw. Note that the set screw has 4 flat sides, so the pivot screw must be turned in 90° increments.
- ☐ Repeat this adjustment for Unit 1.

3. Spindle Bearing Check

For some versions of the PerSci 27x, the spindle motor will not spin until the motor-on signal is provided by the controller. Use Flexer to test the spindle motor and spindle bearing:

- ☐ Select the 'left' diskette in the PerSci drive. Assuming the PerSci drive is units A and B, type:

  %**SE U=A <CR>**

- ☐ Turn the spindle motor on:

  %**MO <CR>**

- ☐ Toggle the motor on and off using <Space>.
- ☐ If the motor does not spin, skip ahead to steps 7 and 8 as you debug the spindle servo.

- ☐ If the spindle does not sound smooth, it may be either the spindle motor or the spindle bearings. Stop the motor and gently remove the belt that connects the motor to the spindle. Start the motor and listen to the sound.

  If the motor is noisy, its bearings are probably bad. Service the bearings as described above.

- ☐ Type **Q** to quit the motor-on function.

4. Presence Detect (both units)

- ☐ Test the Unit 0 presence-detect circuitry by typing:

  % **SE U=A <CR>** (select unit 0)
  % **MO 1 <CR>** (turn the motor on)

- ☐ Insert a diskette in the left unit, and type

  % **SE <CR>** (Flexer's settings and the drive state will be printed.)

  Among the drive status, you should see "Drive ready."

- ☐ Eject the diskette, and type

  % **SE <CR>** (Flexer's settings and the drive state will be printed.)

  This time, you should see "Drive not ready".

  If the ready/not ready messages are incorrect, then debug the circuit.

- ☐ To test Unit 1, type:

  % **SE U=B <CR>** (select unit 1)

  ...and repeat the above test.

5. Write Protect Sense and Remote Eject (both units)

This test only applies to drives that have the write protect option.

- ☐ Test the Unit 0 write-protect detect circuitry by typing:

  % **SE U=A <CR>** (select unit 0)

- ☐ Insert into unit 0 a diskette that has its write-protect notch uncovered, and type:

  % **SE <CR>** (Flexer's settings and the drive state will be printed.)

  Look for the line that says "Disk unprotected".

- ☐ If the drive has the Remote Eject option, eject the diskette by typing

  % **EJ <CR>** (this will also test the eject circuitry.)

  (If your drive does not have the remote eject option, then just push the eject button.)

- ☐ Use a metalized sticker or black electrical tape to cover the write-protect notch on the diskette, and re-insert it into the left unit. Type:

  % **SE <CR>** (Flexer's settings and the drive state will be printed.)

  Look for the line that says "Disk write protected".

- ☐ If either of the unprotected/write protected messages is incorrect, debug the write protect notch detection circuit. If the diskette does jot eject with the EJ command (and your drive does have the remote eject option), then debug the Eject circuit.
- ☐ Repeat the entire procedure for Unit 1.

6. Unit 0 Head Load

- ☐ Disconnect P8 from the Servo Positioner PCBA, to allow manual movement of the positioner carriage.
- ☐ Type:

  %**SE U=A <CR>** (select left diskette)
  % **RE <CR>** (restore to track 0)
  % **HL <CR>** (enter head-load mode)

  The head will load or unload each time you press the space bar.

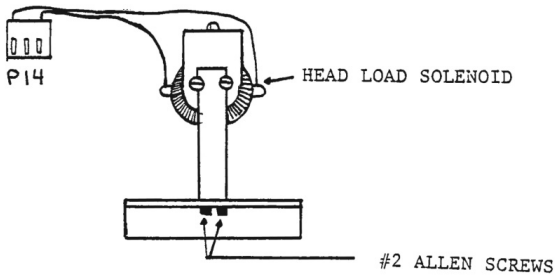

13. Head Load ø

- ☐ Toggle the head load with the space bar, and check that the head lifter just barely does not touch the plastic arm of the head assembly when the lead is loaded. If the head lifter still touches the plastic arm of the head assembly, or if the gap between the lifter and the arm is more than about 1/16”, then loosen the two #2 Allen screws on the underside of the head load solenoid arm and adjust.
- ☐ Manually move the carriage across its whole range, to be sure the head load is even over the entire range.

7. Unit 1 Head Load

- ☐ Type the following:

  % **SE U=B <CR>** (select unit B)
  % **HL <CR>** (Unit 1’s head will load or unload each time you press the space bar.)

- ☐ With no diskette inserted, manually trip the diskette presence sensor. Use the space bar to load the head. When loaded, the pressure pad should be in direct contact with the head. When unloaded, the pressure pad should lift completely away from the head. If not, it is necessary to sharpen the bend in the paddle of the lift pad.
- ☐ Manually move the carriage across its whole range, to be sure the head load is even over the entire range.

8. Spindle Speed

PerSci shipped drives with two different kinds of Spindle Servo boards. If the Spindle Servo board has a crystal on it (assembly number 200729) then its speed is not adjustable. Use Flexer to measure the spindle the spindle speed, and debug the circuit if the rotational speed is not 166.7 µSec ± 2 µSec.

%**SE U=A <CR>** (Select the left drive)
%**SE V=1 <CR>** (Verbose mode)
%**MO <CR>** (Motor on/off with space bar)

Flexer will print the rotational time repeatedly until you type **Q**.

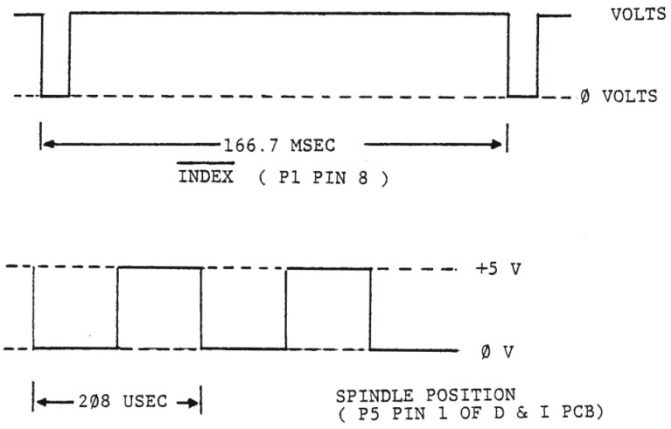

7. Spindle Speed

For Spindle Servo PCBAs that do not have a crystal (PCBA number 200134), spindle speed is controlled by a DC servo loop, which constantly monitors its speed. The reference oscillator for this circuit is on the Interface PCBA (on Page 3 of the Interface PCBA schematic). This oscillator free-runs at about 200 kHz.

- ☐ Connect the 'scope to pin 3 of P5, and observe the waveform. The frequency should be 200 KHz, even with no diskette inserted.
- ☐ Insert a diskette in the left drive, and select it with Flexer:

  %**SE U=A <CR>** (Select the left drive)
  %**MO <CR>** (Turn the motor on or off with the space bar)

  Flexer will display the spindle speed when the motor is on, using the CPU clock as a reference.

- ☐ The ideal spindle revolution time should be 166.67 mS/cycle. Adjust R154 on the Interface PCBA as needed.
- ☐ Type '**Q**' to exit motor-control mode.

9. Spindle Instantaneous Speed Variation

This is a check of the spindle servo to ensure that it can track the rotational speed of the spindle, and compensate for any variation in speed. There are no adjustments to be made. (Problems in this area are very rare.)

- ☐ Connect the 'scope to P5 pin 1, and turn on the motor as in the last step. Adjust the scope so that you can see 10 cycles on the screen. Then go to 10X mode on the scope, and scroll to the end of the waveform. The pulse should not wander more than 3 divisions total.
- ☐ Slow the diskette slightly with pressure on the diskette. The pulse should drift considerably with pressure, but should return rapidly to its original location when pressure is released, allowing the servo to lock again.

10. Positioner Lamp Voltage

This adjustment affects all the other adjustments on the Lamp Amp, and should always be done first.

The positioner lamp is mounted on the Lamp Amp PCBA, and provides the light source for the solar cells, which detect markings on the positioned scale. On earlier drives the positioner lamp is a low voltage

"grain-of-wheat" incandescent lamp. On later drives (and drives that have been upgraded), it is an infrared LED (IRLED). On all but the earliest drives, the lamp voltage is limited by a series of three diodes to about 2.1V. You can tell whether your drive has an IRLED by looking at R15 and R21 on the Lamp Amp board. If R15 is 62 ohms and no component is loaded in R21, then your drive has an IRLED in its positioner servo. Otherwise, it has an incandescent lamp.

For servos with IRLEDs:

- ☐ Connect a 'scope probe to the junction of R15 and the collector of Q1. (This point is accessible on the bottom of the lamp amp PCBA when the black plastic cover over the positioner scale is removed.)
- ☐ Adjust pot R3 on the Lamp Amp for a reading of 2.0V DC on the 'scope. (On some - but not all - Lamp Amp PCBAs, TP 7 has been moved to the junction between R15 and Q1.)
  - ☐ If the voltage does not adjust smoothly, or jumps around as you adjust R3, then R3 has become intermittent and should be replaced.

Note that the back of the IRLED is transparent. If your workbench light is shining on the back of the IRLED (obviously, with the Data and Interface PCBA is the open position), then its light will interfere with the voicecoil servo, causing erratic behavior.

For Servos with incandescent lamps:

- ☐ Connect a 'scope probe to TP 7 on the Lamp Amp PCBA, set for DC coupling.
- ☐ Adjust pot R3 on the Lamp Amp for 1.5V DC at TP 7. (Do not exceed 1.6V, particularly for an early drive without the limiting diodes!)
- ☐ If the lamp voltage reads 2.1V (5V without the limiting diodes) and cannot be brought into spec, the most likely cause is a burned-out lamp. In this case, with the power turned off, the resistance between TP 7 and ground will be near infinite. The lamp should be replaced.

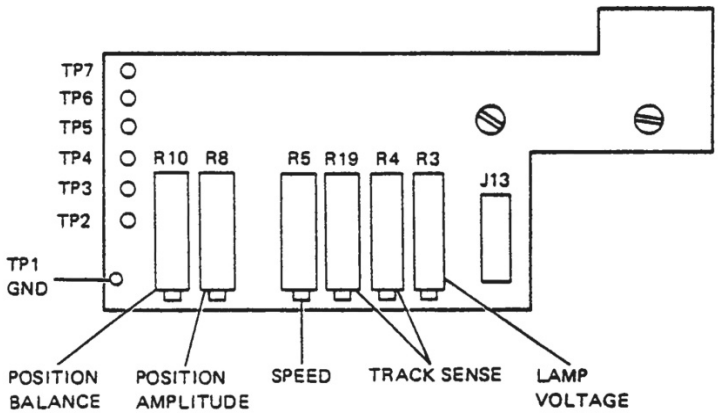

Lamp Amplifier PCB

- ☐ If the voltage does not adjust smoothly, or jumps around as you adjust R3, then R3 has become intermittent and should be replaced.
- ☐ If you need to replace the positioner servo lamp, it is a "T1" style lamp, rated for 20 mA at 2.5V. This lamp should draw close to 100 mA at 1.5V (which is the lamp's operating voltage in the PerSci drive). If you cannot find the exact lamp, you can substitute with a T1 lamp that is close, and then adjust the lamp voltage so that it draws the same power as the original, 150 mW. (You can measure the lamp's current by measuring the voltage across [R15 in parallel with R21], and then dividing by the combined resistance of these resistors (which is nominally 34 ohms, but you should measure them carefully).

  I have done this successfully with a T1-style lamp that draws about 150 mA at 1.5 volts (which was far too bright). This lamp's current was reduced to 146 mA when I adjusted R1 to set TP 7 to 1.06

volts, for a lamp power consumption of 154 mW. With this adjustment, the drive works perfectly. I put a sticker on the positioner scale cover alerting future technicians that the correct adjustment voltage is 1.06 volts, rather than the specified 1.5V.

- ☐ To replace the positioner servo lamp without full drive disassembly:
  1. Remove the two screws at the bottom of the Data and Interface PCBA, and swing this board open.
  2. Remove the right-side head load paddle. (Release its two springs first.)
  3. Remove the four small Philips screws from the black lamp housing.
  4. Carefully de-solder the lamp leads from the Lamp Amp PCBA. Avoid any splashing of solder!
  5. Insert the new lamp and solder it in place
  6. Re-install the black cover, the head-load paddle, and the Data and Interface PCBA.

11. Tach Voltage

This adjustment is a course adjustment of the circuit which controls the speed at which the head seeks between two tracks.

Later in the procedure, this will be adjusted more accurately. Symptoms of a problem here are the head either seeking too slowly or too fast, and "hunting" for tracks.

- ☐ With the power off, disconnect P8 from the Positioner Servo PCBA to allow manual movement of the head assembly.
- ☐ Connect 'scope probe to TP 5 on the Lamp Amp PCBA.
- ☐ Power up the drive and manually move the head assembly to the outside track (track 0) and note the voltage reading on the 'scope. Then, manually move the head assembly to the inside track (track 76). Note the voltage reading on the 'scope.
- ☐ Adjust R5 for -1.5V difference from the track 0 reading.

12. Positioner Voltage

This adjustment is to setup the correct voltage for the detent pulses (one sine wave cycle for every track the head moves), which enable the drive to "Know" how many tracks it has traversed. Symptoms of a problem here might be seek errors, "hunting", or the head slamming to extremes during seeks.

- ☐ Leave P8 disconnected from the previous step.
- ☐ Connect 'scope to TP 2 on the Lamp Amp PCBA.
- ☐ Manually move the head assembly back and forth between track 0 and track 76, and observe the voltage on the scope. The waveform should be centered at 0 volts, and the peak-to-peak voltage should be at least 3.0V, ideally 3.4V.

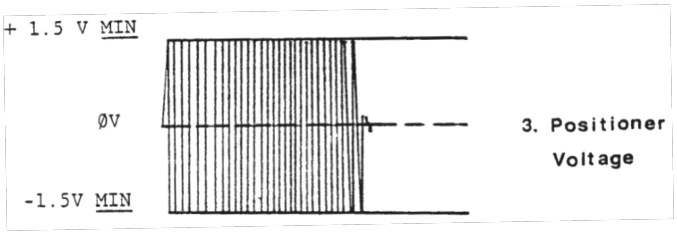

- ☐ Adjust R10 to center the waveform at 0V, and adjust R8 to set the amplitude to 3.4V.
- ☐ If the waveform does not adjust smoothly, or jumps around as you adjust R8 or R10, then the trim pot(s) has probably become intermittent and should be replaced.

13. Track 43-1/2 Manual Adjustment

- ☐ Disconnect P8 from the Positioner Servo PCBA.
- ☐ Place the 'scope probe on TP 6 on the Lamp Amp PCBA.
- ☐ Manually move the head assembly back and forth through the middle of its range, observing the waveform from TP 6.
- ☐ Adjust R4 (gain) and R19 (balance) so that the voltage swings from +0.5V to -1.25V.
- ☐ Power off and reconnect P8 to the Positioner Servo PCBA when done.

14. Dirty Scale Check

The scale is sheltered from dust particles by the scale cover and the filtered air system of the disk enclosure. However, over the years, the scale may have become dirty and must be cleaned. The wedge-shaped window on the bottom of the scale, which is used for tach output, is the most sensitive to dirt, which will cause erratic seek problems, skipping tracks, or slamming against the end stops.

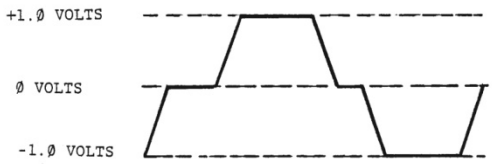

5. CLEAN SCALE (NO SPIKES)

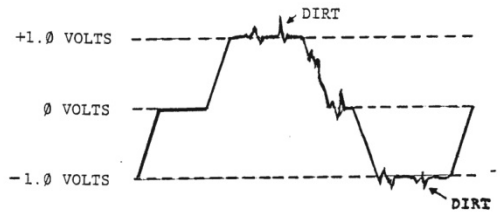

5. Dirty Scale

- ☐ Connect the 'scope channel B to Seek Complete, P1 pin 10 (on the Interface PCBA), and set the 'scope to trigger on the negative edge of channel B. Connect the 'scope channel A to U13 pin 7 on the Positioner Servo PCBA.
- ☐ Assuming Flexer is still set up from the previous step, start automatic seeking:

  % **SE U=A<CR>**
  % **SK 0 76 <CR>**

- ☐ The head should be fast-seeking between tracks 0 and 76.

  Observe the 'scope channel A. Normally there will be a small amount of noise riding on this signal. Any spikes greater than 0.25V indicate excessive dirt on the scale.

  The scale can be gently cleaned in place, using a cotton swab and alcohol. The left side is easily cleaned with the scale cover removed. The right side is a bit trickier. It can be cleaned by removing the solar cell assembly and cleaning the scale through the solar cell assembly hole, while manually moving the head assembly to reach the entire scale.

- ☐ Stop seeking by typing '**Q**'

15. Seek Time

These seek steps are a bit iterative; you must find a balance between each of these adjustments.

See Track 0 - 76

This course adjustment brings the full-stroke seek time into the specified maximum of 95 mSec. (less than 100 mS as measured by Flexer.)

- ☐ Hook the channel A 'scope probe to TP 2 on the Lamp Amp PCBA and the channel B 'scope probe to P1 pin 10 on the Interface PCBA. Trigger the 'scope on the negative edge of channel B.
- ☐ Start Flexer and set it for automatic seeking between tracks 0 and 76:

  %**SE U=A <CR>** (select unit A)
  %**SE A=1 <CR>** (Enable automatic mode)
  %**SE T=0 <CR>** (disable track display)
  %**SK 0 76 <CR>** (Seek between tracks 0 and 76)

  The head should be seeking quickly between tracks 0 and 76.

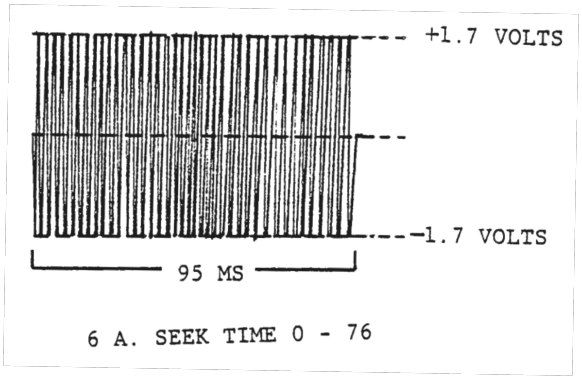

- ☐ Observe channel A on the 'scope. There should be a 3.4V peak-to-peak signal that is balanced around 0 volts, as adjusted in step 3 above. If not, re-adjust R8 and R10 on the Lamp Amp PCBA to bring this signal into spec. (This is a dynamic adjustment while the head is in motion.)
- ☐ Set the 'scope for 10 mS/division, and adjust the trigger to see the entire burst. Adjust R5 on the Lamp Amp PCBA so that the burst is 95 mS long. (See illustration 6A.) Alternatively, you can use Flexer's seek time measurement, and adjust the seek time to be less that 100 mS.
- ☐ If the seeking becomes erratic while when making this adjustment, then adjust R33 on the Servo Amp PCBA to stabilize the seek.
- ☐ Lamp Amp PCBAs before rev H use an LM1458 op-amp, instead of the faster LF353 used on later boards. With an older Lamp Amp PCBA, it may not be possible to seek reliably faster than about 103 mS, as measured by Flexer.
  - ☐ Type '**Q'** to stop seeking.

Seek Track 0 - 1

- ☐ With the 'scope set up as in Step 6A, start seeking between tracks 0 and 1:

  %**SK 0 1 <CR>**

  The head should now be seeking rapidly between tracks 0 and 1.

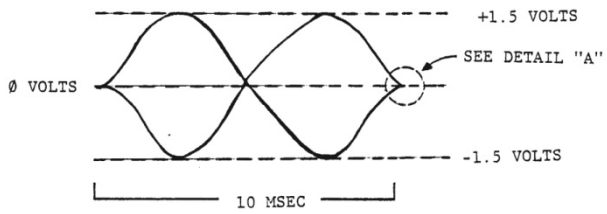

6 B & C Seektime [Track 0–1 & 75–76]

- ☐ Set the 'scope for 1 mS/division. Adjust the trigger to see one full cycle, as shown in the diagram. (You will actually see two superimposed sinusoidal waves, with one of them 180 degrees out of phase from the other.) These waves should have a duration of 10 mSec, and should be relatively symmetrical. Adjust R5 on the Lamp Amp PCBA for speed variation, and adjust R33 on the Positioner Servo PCBA for symmetry.

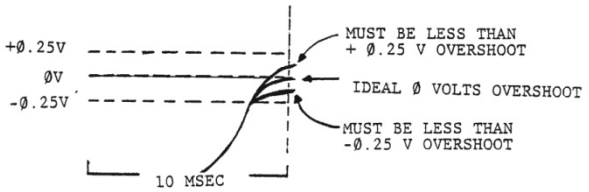

Detail "A"

- ☐ Type '**Q'** to stop seeking.
- ☐ Again, noise during adjustment is an indication that the trim pot is failing and should be replaced.

Seek Track - 76

- ☐ With the 'scope set up as in Step 6B, start seeking between tracks 75 and 76:

  %**SK 75 76 <CR>**

  The head should now be seeking rapidly between tracks 75 and 76.

- ☐ Again, adjust R5 on the Lamp Amp PCBA for speed variation, and adjust R33 on the Positioner Servo PCBA for symmetry.
- ☐ Repeat steps 6B and 6C as necessary to achieve a reasonable balance.
- ☐ Type '**Q'** to stop seeking.

Step Seek and Overshoot

This is the most critical of the seek adjustments, checking the overall range of seeking (tracks 0 to 76), and correcting excessive overshoot and speed problems encountered throughout that range.

- ☐ Leave the scope probes as they were in steps 6A through 6C.
- ☐ This time, start stepping between tracks 0 and 76:

  %**SE R=3 <CR>** (Select 15 mS step rate)
  %**ST 0 76 <CR>** (track-to-track step between tracks 0 and 76)

  The head should now be doing a rapid step-seek between track 0 and track 76. The head is actually stepping to each individual track, stopping, and then proceeding to the next track.

- ☐ Set the 'scope for 2 mS/division, and adjust the trigger to see one full cycle. (The phase will change each time the head changes direction.)
- ☐ Observe channel A. The period of the wave should be 10 mS, and should settle within 0.25 volts of 0 by the time 10 mS is up. (See diagrams.) If this is not the case, adjust R5 and R33 (as in previous steps) to bring it in spec.
- ☐ Excessive jitter on the waveform may be an indication of excessive dirt on the positioner scale - repeat step 5 if so.
- ☐ Type '**Q'** to stop stepping.

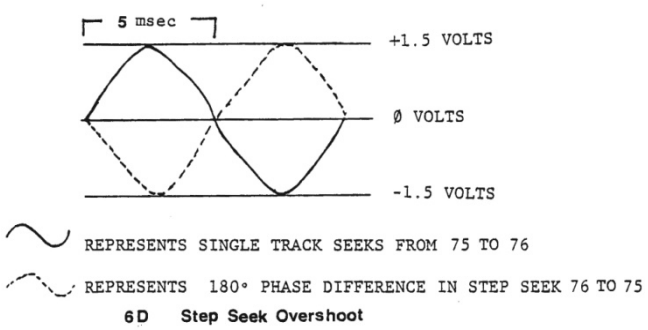

6D Step Seek Overshoot

16. Unit 0 Index Rough Adjustment

The purpose of this step is to get the Unit 0 index detector working well enough that the track alignment can be done.

- ☐ The IRLED is mounted in gray plastic frame that is screwed to the left side of the drive frame, and should be positioned such that maximum IR light passes through the diskette's index hole. Insert an expendable diskette, and spin the disk in the sleeve such that the index hole is centered in the matching hole in the sleeve. Slide this diskette in the drive, and use it to align the position of the IRLED such that it is centered beneath the index hole in the disk.
- ☐ The index phototransistor on Unit 0 is mounted to the cone arm with a #2 Allen screw. If the slit in the phototransistor is not approximately centered over the index hole, then adjust it so that it is.

17. Cats-eye Unit 0

The purpose of this adjustment is to ensure compatibility between disk drives, so that diskettes written on one drive can be read on another. Track 38 (near the center) of the alignment diskette has a pattern referred to as a cats-eye (see diagram). **NOTE:** If an adjustment is made here, then you must also adjust Unit 1, since it is a slave to Unit 0.

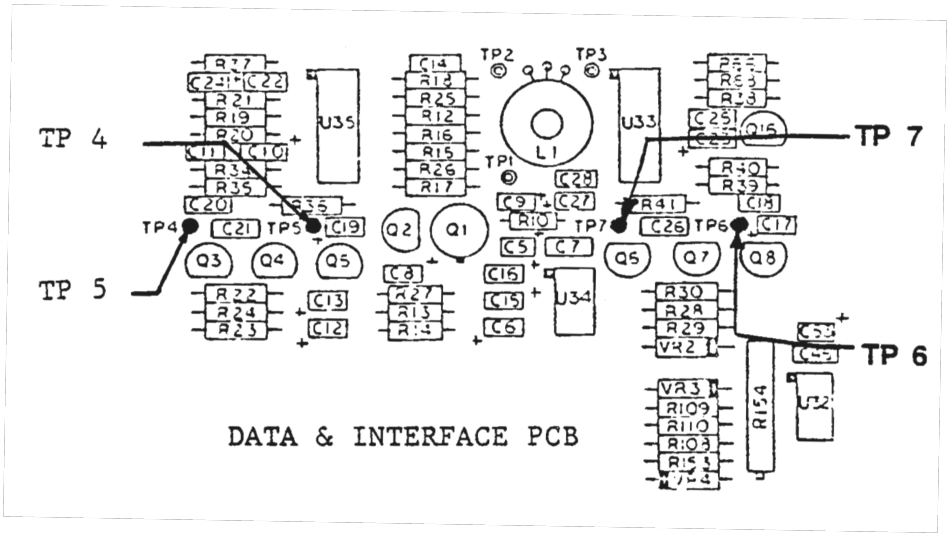

- ☐ Connect scope probes 1 and 2 across TP 4 and TP 5, (across C21 for early drives) and use probe 3 to trigger on the falling edge of P1 pin 20. Set channel 1 & 2 for AC coupling, 100 mV/div, and for differential measurement (add/invert). Set the time base for 20 mSec/division.
- ☐ Insert the Dysan alignment diskette, and type the following:

% **SE U=A <CR>**	(Unit 0)
% **RE <CR>**	(restore to track 0)
% **SK 38 <CR>**	(seek track 38)
% **HL 1 <CR>**	(load the head)

- ☐ Observe the cats-eye pattern on the 'scope. Ideally, the amplitude of the two "eyes" will be the same. The maximum allowable difference is 10%, which represents a ½ mil track error.

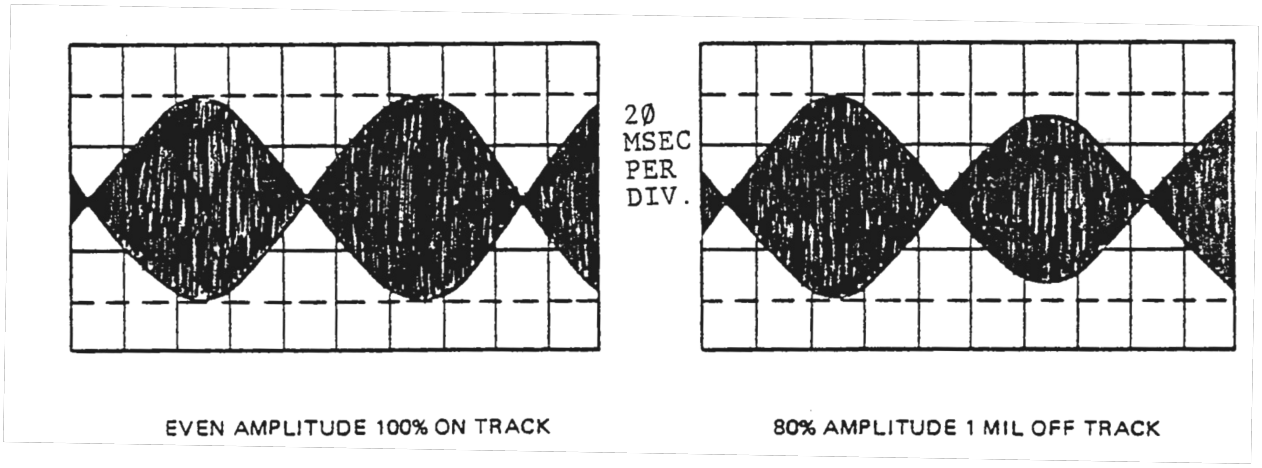

☐ If the cats-eye is out of spec, perform the following steps:

1. Restore to track 0 (% **RE <CR>**) and remove the black scale cover.
2. Use an Allen wrench that is protected with heat-shrink tubing along its length to loosen the two Allen screws mounting the black lamp housing to the chassis. (older drives may have slotted screws.)
3. Seek track 38 and load the head as above.
4. Gently tap the Lamp Amp PCBA in the appropriate direction: toward the front to increase the left cats-eye, toward the rear to increase the right cats-eye.
5. Tighten the screws, and recheck the cats-eye. (Tightening tends to change the cats-eye.)

With a little effort, the cats-eye adjustment can be made close to perfect.

18. Unit 0 Index & Azimuth Adjustment

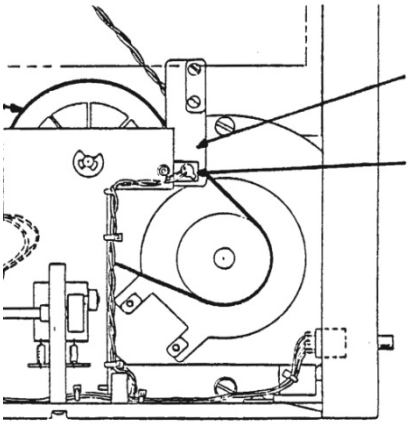

☐ Step A: The index phototransistor on unit 0 is located near the cone on the door, and is mounted with a #2 Allen screw. When in perfect alignment, maximum saturation is achieved, and the steepest response curve is possible. Since index pulses are critical, the faster the op-amps trigger, the more precise the timing.

Place the 'scope probe on P11 pin 2 on the Data & Interface PCBA, and trigger on that channel. Set the gain for 1 volt/division. Insert a diskette and note the waveform. Every time the index hole passes over the phototransistor, there should be an excursion toward 0. Maximum excursion is about one diode drop above 0V (0.3V to 0.6V). If this is not the case, loosen the Allen screw that holds the light source and adjust as necessary.

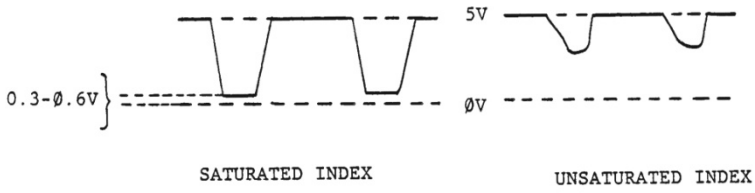

☐ Step B: This part of this step aligns the index sensor to the data burst written on the alignment diskette. Connect scope probes 1 and 2 across TP 4 and TP 5, (across C21 for early drives) and use probe 3 to trigger on the falling edge of P1 pin 20. Set channel 1 & 2 for AC coupling, 100 mV/div, and for differential measurement (add/invert). Insert the Dysan alignment diskette, and type:

<<<NEED NEW PICTURE>>>

% **SE U=A <CR>** (Select the left diskette)

% **RE <CR>** (Restore to track 0)

% **SK 76 <CR>** (Seek track 76)

% **HL 1 <CR>** (load the head.)

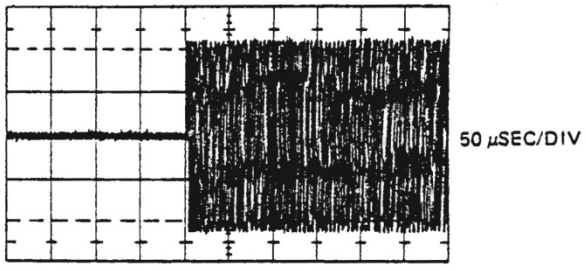

Observe the waveform, as illustrated. The data burst should occur 200 µSec after the trigger, plus or minus 10 µSec. if not, loosen the slotted screws that hold the infrared receiver and adjust its position so that the timing of the burst is in spec. (CAUTION: Do not overtighten the screws or you will crack the plastic.)

Then perform step A again, and re-check this step. Eject and re-insert the diskette several times to be sure that the alignment remains correct.

☐ Step C: This part adjusts the azimuth – setting the motion of the positioner carriage to be perpendicular to the radius of the diskette by adjusting the index position so that it is the same for track 1 and track 76.

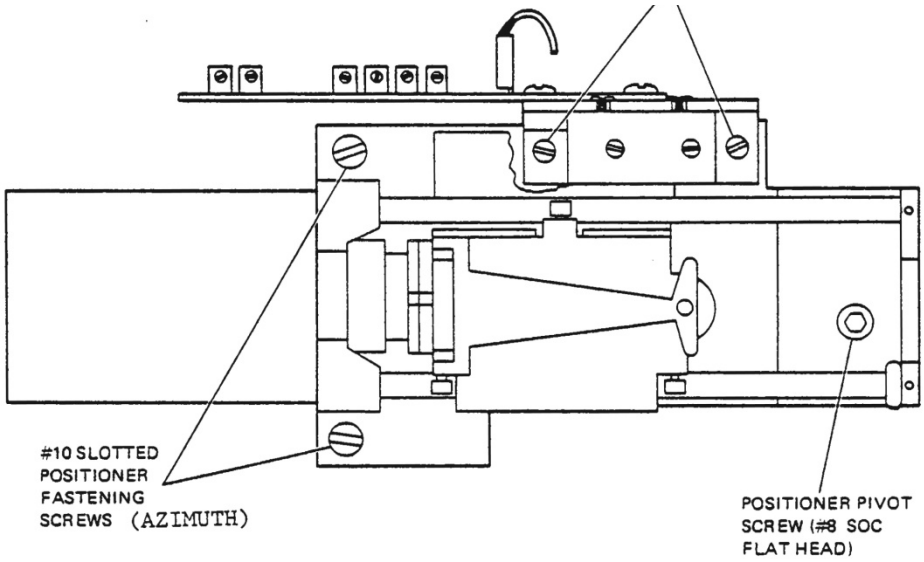

% **SK 1 <CR>** (Seek track 1)

% **HL 1 <CR>** (load the head.)

Observe the waveform, as illustrated. The data burst should occur after the trigger, within 5 µSec from the measurement is Step A. if not, eject the alignment diskette, power down, and:

1. Completely loosen the two large cap screws that hold the voicecoil magnet to the cross-member
2. Slightly loosen the flat-head hex-drive pivot screw that holds the voicecoil assembly at the center of the drive
3. Slightly loosen the two slotted screws (or cap screws) that hold the voicecoil to the back of the drive frame.
4. Power up and reinsert the alignment diskette.
5. Re-seek track 1, and adjust the azimuth by moving the voicecoil assembly slightly up or down until the measurement is the same for track 1 and track 76. (Use a small screwdriver to gently pry up on the bottom of the servo mounting assembly (directly behind the diskette eject motor) where it meets the chassis.
6. Repeat step C so that the mark occurs 200 µSec ± 5 µSec on bot tracks, with no more than 2 µSec difference between the two tracks.
7. Tighten the screws.

19. Track 0 Sense Adjustment

The purpose of this adjustment is to allow the drive to sense track 0.

☐ Check the Track 0 sense. Type

% **SE U=A <CR>** (Select unit A, the left side of the PerSci drive)
% **RE <CR>** (Seek track 0)
% **SE <CR>** (Flexer's settings and the drive state will be printed.)

☐ Look for the line that says "Track 0 detected".

☐ Now, type:

% **ST 1 <CR>** (Step in to track 1)
% **SE <CR>** (Flexer's settings and the drive state will be printed.)

- ☐ Look for the line that says "Track 0 not detected".
- ☐ If either the detected or not detected message is wrong, debug the track 0 sense circuit before proceeding. Track 0 is detected by the Positioner Servo, in conjunction with the Lamp Amp and the positioner scale.

20. Track 43-1/2 Sense Adjustment

The purpose of this adjustment is to allow the drive to sense the point at which it reaches track 43-1/2. (Starting at track 44, it is necessary to decrease the bias on the write head. This keeps the drive from over-saturating the media on the inner tracks, which are moving more slowly across the write head, but which are being written at the same clock rate.)

- ☐ Select the 'left' diskette in the PerSci drive, and seek between tracks 43 and 44:

%**SE U=A <CR>** (select drive)
%**SE A=1 <CR>** (automatic mode)
%**SE T=0 <CR>** (disable track display)
%**SK 43 44 <CR>** (seek between tracks)

The head should now be seeking between tracks 43 and 44.

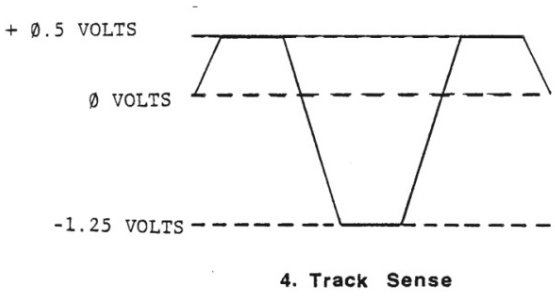

4. Track Sense

- ☐ Adjust R4 (gain) and R19 (balance) so that the voltage swings from +0.5V to -1.25V.
- ☐ Stop seeking by typing '**Q**'

If adjustment causes the signal to jump about, or the settings don't stay where you put them, then one or both of the trim pots has probably become intermittent and should be replaced.

If the drive fails to servo, it may be that R4 and R19 are very far out of adjustment. If so, redo step from Step 9 onward.

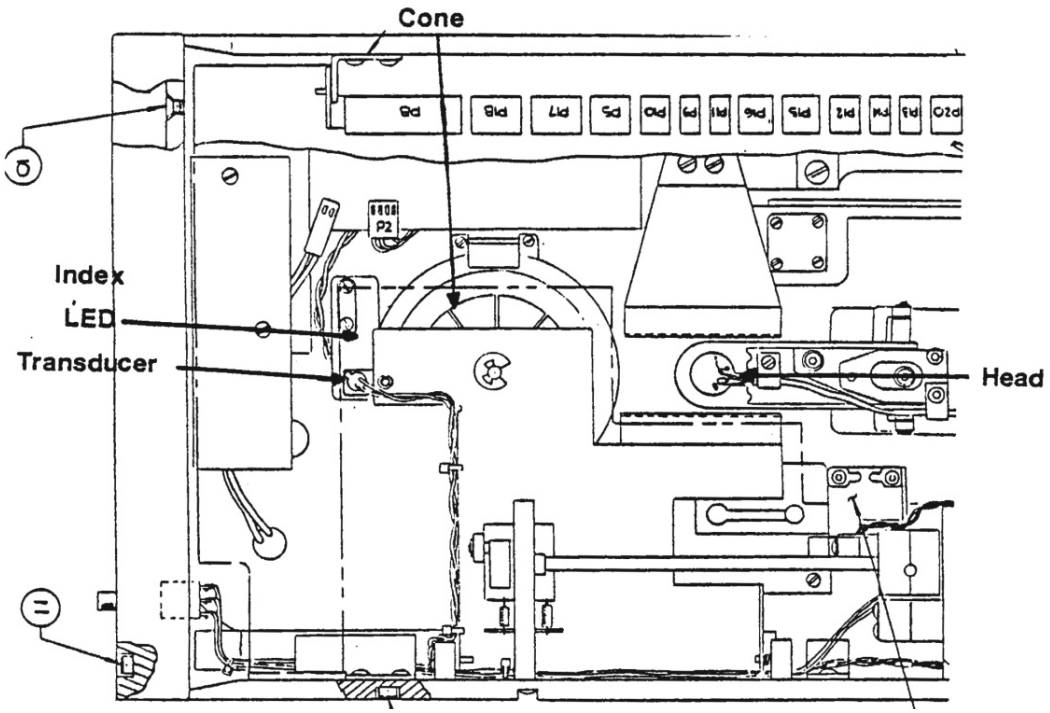

21. Unit 1 Index Rough Adjustment

The purpose of this step is to get the Unit 1 index detector working well enough that the track alignment can be done.

- ☐ The IRLED is mounted in gray plastic frame that is screwed to the right side of the drive frame, and should be positioned such that maximum IR light passes through the diskette's index hole. Insert an expendable diskette, and spin the disk in the sleeve such that the index hole is centered in the matching hole in the sleeve. Slide this diskette in the drive, and use it to align the position of the IRLED such that it is centered beneath the index hole in the disk.
- ☐ The index phototransistor on Unit 1 is mounted to the cone arm with a #2 Allen screw. If the slit in the phototransistor is not approximately centered over the index hole, then adjust it so that it is.

22. Unit 1 Cats-eye

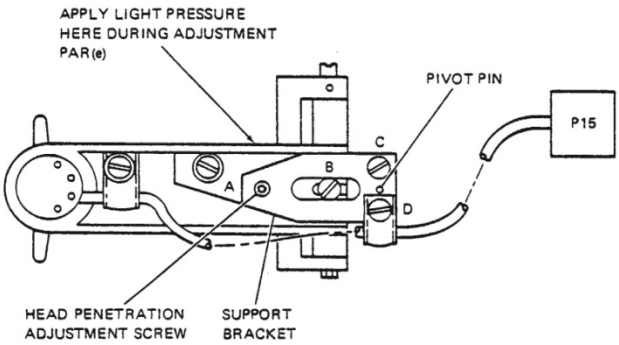

- ☐ Connect scope probes 1 and 2 across TP 6 and TP 7, (across C26 for early drives) and use probe 3 to trigger on the falling edge of P1 pin 20. Set channel 1 & 2 for AC coupling, 100 mV/div, and for differential measurement (add/invert). Set the time base for 20 mSec/division.
- ☐ Insert the Dysan alignment diskette, and type the following:

% **SE U=B <CR>**	(Unit 1)
% **RE <CR>**	(restore to track 0)
% **SK 38 <CR>**	(seek track 38)
% **HL 1 <CR>**	(load the head)

☐ Observe the cats-eye pattern on the 'scope. Ideally, the amplitude of the two "eyes" will be the same. The maximum allowable difference is 10%, which represents a ½ mil track error.

☐ If the cats-eye is out of spec then an adjustment is necessary:

1. Loosen the two Allen screws (A and B, slotted screws in older drives) in the center of the head arm, to allow the head to move horizontally, front to back.
2. Adjust the head position the bring the cats-eye into spec
3. Retighten the screws.
4. Recheck the cats-eye after tightening.

Note: The cats-eye, azimuth, and head penetration adjustments on unit 1 are all interdependent. If you adjust any one of these three, then re-check and re-adjust the others as needed. Repeat until all three adjustments are within spec.

23. Unit 1 Index & Azimuth

Unit 1's alignment is slaved to Unit 0, such that any adjustments to the alignment of Unit 0 will require an alignment of Unit 1. Further, the azimuth of Unit 1 is mostly set by the azimuth adjustment of Unit 0, though a small amount of azimuth adjustment is possible for Unit 1.

☐ Step A: The index phototransistor on unit 1 is mounted to the cone arm with a #2 Allen screw. When in perfect alignment, maximum saturation is achieved, and the steepest response curve is possible.

Place the 'scope probe on P9 pin 2 on the Data & Interface PCBA, and trigger on that channel. Set the gain for 1 volt/division. Insert a diskette and note the waveform. Every time the index hole passes over the phototransistor, there should be an excursion toward 0. Maximum excursion is about one diode drop above 0V (0.3V to 0.6V). If this is not the case, loosen the Allen that holds the light source and adjust as necessary.

☐ Step B: This part of this step aligns the index sensor to the data burst written on the alignment diskette.

Connect scope probes 1 and 2 across TP 6 and TP 7, (across C26 for early drives) and use probe 3 to trigger on the falling edge of P1 pin 20. Set channel 1 & 2 for AC coupling, 100 mV/div, and for differential measurement (add/invert). Insert the Dysan alignment diskette, and type:

% **SE U=B <CR>**	(Select the tight diskette)
% **RE <CR>**	(Restore to track 0)
% **SE A=1 <CR>**	(manual mode)
% **HL 1 <CR>**	(load the head)
% **SK 76 1 <CR>**	(Seek track 76 an 1)

The drive will seek from track 76 to track 1 or from track 1 to track 76 each time you press the space bar. Observe the waveform, as illustrated. The data burst should occur 200 µSec after the trigger, plus or minus 10 µSec. if not, loosen the slotted screws that hold the infrared receiver and adjust its position so that the timing of the burst is in spec. Then perform step A again, and re-check this step B. Eject and re-insert the diskette several times to be sure that the alignment remains correct.

☐ Step C: This part adjusts the azimuth – setting the motion of the positioner carriage to be perpendicular to the radius of the diskette by adjusting the index position so that it is the same for track 1 and track 76. Only a small amount of adjustment is possible here – the majority of the azimuth adjustment was done for Unit 0

<space> (Seek track 1)

☐ Observe the waveform, as illustrated. The data burst should occur after the trigger, within 10 µSec from the measurement is Step B. if not:

1. Loosen screws C and D on the Unit 1 head arm.
2. Adjust the angle of the arm until the index burst on track 1 is within 5 µSec of the index burst on track 76.
3. Tighten the two screws, and check to be sure that the azimuth is still in spec after tightening.
4. Repeat Step B above.

24. Phase Lock Oscillator

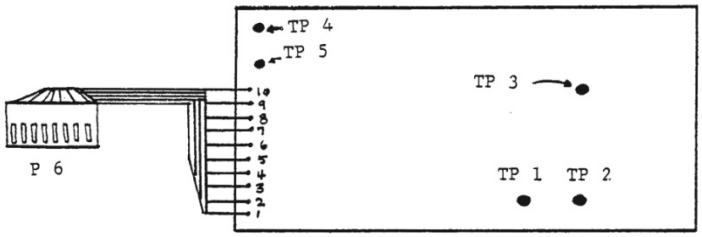

PHASE LOCKED DOUBLE DATA SEPARATOR

The PerSci drive may or may not include a Data Separator board. This board is not used when the PerSci drive is connected to a disk controller board that uses a Western Digital 177x/179x disk controller IC (such as the Cromemco disk controllers), as these disk controllers also have data separators. However, you can still adjust the data separator on the PerSci drive if you want, or just skip this step and the next one. (You can also remove this board from the drive.)

Data Separator problems most often occur in this PLL circuit, and most can be eliminated by proper DC bias. (Rarely is there a problem in the Johnson Code Counter or the following 1-shots.)

☐ Center the 'scope trace on the screen, and set it for 0.1 V/division, DC coupling, and 20 mS per division. Set the 'scope to invert channel B and add channels A and B. Connect 'scope channel A to TP 1, and channel B to TP 2, both on the Phase Lock Loop Data Separator PCBA.

☐ Type:

%**SE U=A <CR>** (Selects drive A)
%**SK 40 <CR>** (Seeks track 40)
%**WP 00 FF <CR>** (Sets up a track-write with alternating 00-FF pattern)

☐ Make sure the write parameter look correct, insert a junk diskette (with write-enable tab installed) in drive A, and press '**Y**'. This will write an alternating pattern of 00 and FF onto track 40. Note that this is an unformatted write: no sectors are created. Instead, the pattern is written across the entire track. Now type:

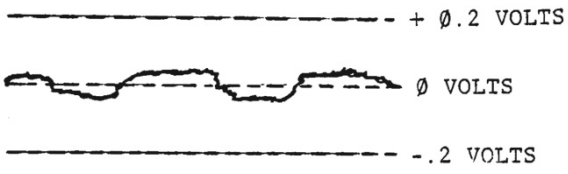

9. Phase Locked Loop DC Bias

%**HL 1 <CR>** (loads head)

- ☐ You should see basically a DC level centered about the zero reference, with small fluctuations above and below 0. Adjust R13 on the PLL Data Separator PCBA as necessary to set the DC level to 0.
- ☐ With the 'scope set up for single-ended reading, connect the probe to TP3 on the PLL Data Separator PCBA. You should see a relatively stable 500 KHz sawtooth waveform, tracking with diskette speed variations.

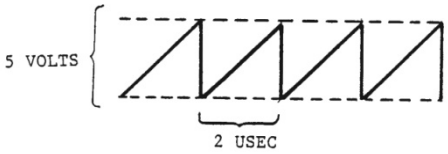

9. 500 KHz Sawtooth [TP 3]

25. Separated Clocks and Data

Whenever a pattern of data is written to the diskette, a series of clocks are also written to the diskette. It is between these clocks that we see the data. In the case of FM (single-density) recording, a one is represented by the presence of a pulse between the clock pulses, and a zero is represented by no pulse between the clock pulses.

- ☐ Insert a scratch diskette that has its write protect notch covered into the left unit. Note: Use a metallic sticker or a piece of black electrical tape to cover the write-enable notch. Paper stickers (such as diskette labels) are not sufficiently opaque, and may not be seen by the drive.

To write all ones, type:	**To write all zeros**, type:	**To write a pattern of ones and zeros**, type:
%**WP FF <CR>**	%**WP 00 <CR>**	%**WP 00 FF <CR>**
Press 'Y' after making sure everything looks right.	Press 'Y' after making sure everything looks right.	Press 'Y' after making sure everything looks right.
%**HL 1 <CR>** to load the head	%**HL 1 <CR>** to load the head	%**HL 1 <CR>** to load the head

- ☐ With the 'scope set on alternate sweep, connect probes to TP 4 and TP 5 on the PLL Data Separator PCBA. Sync on TP 4 (clock). Set the time base to 0.5 uSec/division, and the gain at 2 V/division.

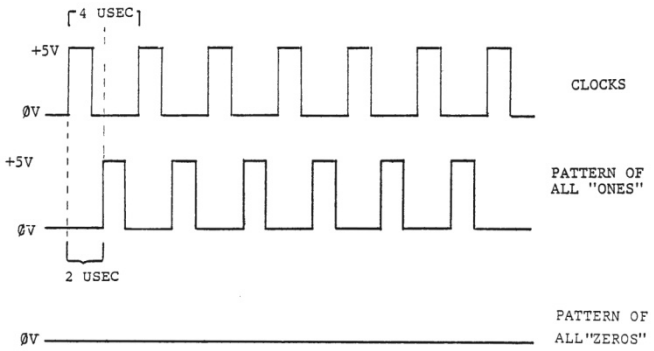

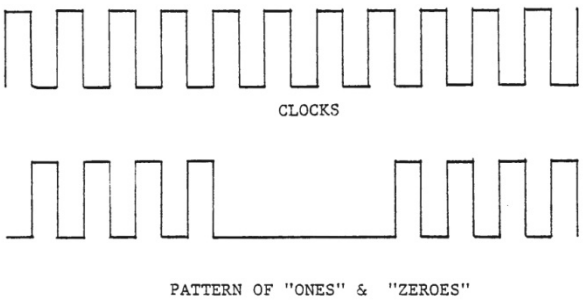

PATTERN OF "ONES" & "ZEROES"

- ☐ Write a pattern of all ones, as shown above. The data should be a positive pulse following 2.0 uSec after each clock pulse. Write a pattern of all zeros, as shown above. Note the absence of data pulses between the clock pulses. With a pattern of ones and zeros, you should see some data pulses present, and others missing.

The following steps are made with 'scope channels A and B connected across C21 (TP 4 and TP 5) on the Data and Interface PCBA. The 'scope should be in Add mode, with channel B inverted. Both channels should be set for AC coupling and 0.2V/division. Channel C should be connected to the Index signal, P1 pin 20, and the 'scope should be triggered on Channel C.

26. Resolution Unit 0

☐ Insert a scratch diskette in unit A and type:

% **SE U=A <CR>** (Select unit A)
% **RE <CR>** (Restores to track 0)
% **HL 1 <CR>** (loads the head)
% **WP 0 FF <CR>**(Writes alternating pattern to diskette track)

(Check that the parameters look correct, and type '**Y**')

% **MO <CR>**(Toggle the motor on, if it is off, tokeep the motor spinning while you work.)

☐ The pattern on the scope should look like the illustration. At track 0, there should be at least a 10% difference between the two frequencies.



11. Resolution

☐ Now type:

Q (exit motor mode)
% **SK 76** **<CR>** (seek track 76)
% **WP 0 FF <CR>**(Write pattern)

(Check parameters and type '**Y**')

% **MO <CR>** (Toggle the motor on if it is off to keep the motor spinning while you work.)

☐ At track 76, there should be a minimum of 60% difference between the two frequencies.

27. Head Contact Unit 0

☐ Exit motor mode by typing '**Q**'. Leave the same diskette (with patterns on tracks 0 and 76) in the drive.

☐ Type:

% **SE A=0 <CR>** (disable automatic mode)
% **SK 0 76 <CR>** (Seek tracks 0 and 76)

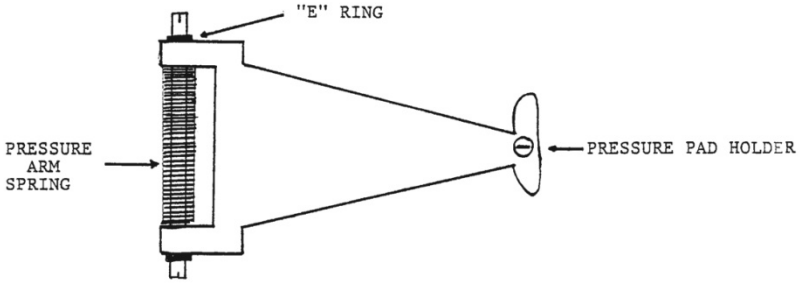

Pressure Pad Arm

The drive will seek from track 0 to track 76 or from track 76 to track 0 each time you press the space bar.

☐ Place a finger on the side=0 pressure pad arm, and apply slight pressure. The signal amplitude should decrease or remain the same.

☐ If the signal amplitude increases, rotate the pressure pad until there is no increase with pressure, or replace the pressure pad as necessary. Do this check on track 0 and track 76.

Note: PerSci used two different types of pressure pads on the 27x drives. One type has fine rabbit hair, the other has a red synthetic material. Both appear to have good durability.

28. Unit 1 Head Penetration

☐ First, check the condition of the pressure pad. If it is very worn, replace it.

- ☐ Set up Flexer to seek tracks 0 and 76
- ☐ Use the same commands as step 29 to seek tracks 0 and 76, and to load and unload the head. The signal should be reduced by at least 50% when the head is unloaded, both at track 0 and at track 76.
- ☐ Unit 1 has an adjustment for head penetration, the #2 Allen screw in the center of the plastic arm on which the head is mounted. With the head unloaded, adjust the screw until the signal disappears (or is at least reduced by 50%).
- ☐ Check this at track 0 and at track 76. Make sure that the signal returns when the head is loaded, both at track 0 and at track 76.
- ☐ Caution is advised with this adjustment, as too much head penetration will cause problems with extreme wear on the diskette, and head contamination with diskette material.

29. Resolution Unit 1

Repeat step 26, except select unit 1 by typing

% **SE U=B <CR>** (selects the right unit, assuming it is CDOS unit B.)